THIS DRAWING IS UNPUBLISHED. RELEASED FOR PUBLICATION -,- .
© COPYRIGHT - By - ALL RIGHTS RESERVED.

LOC	DIST
G	14

REVISIONS

P	LTR	DESCRIPTION	DATE	DWN	APVD
	E3	REVISED PER ECO-13-006583	18APR13	KH	DR

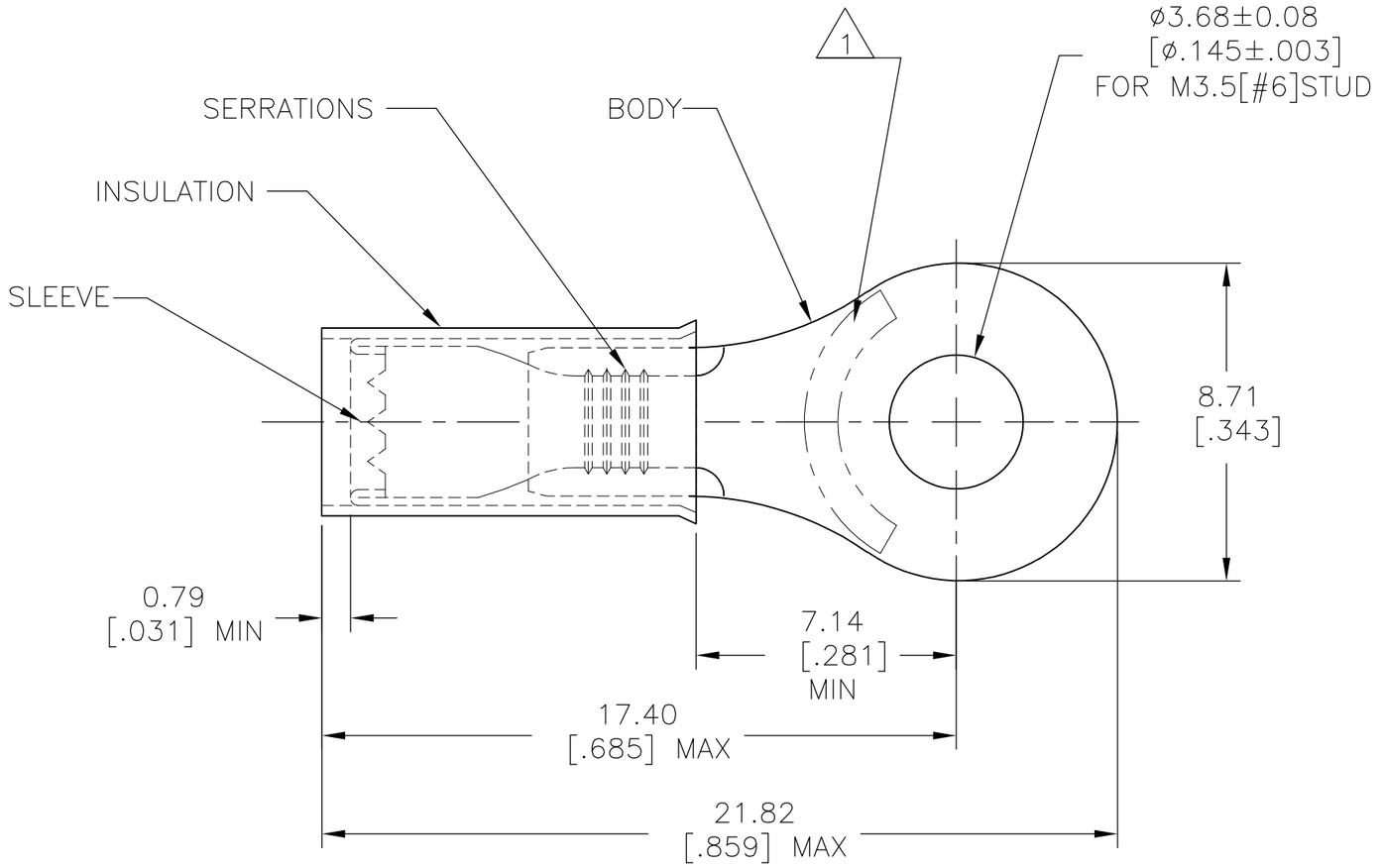

1 STAMP AMP 16-14* MAY BE ON TOP OR BOTTOM APPROX AS SHOWN

2 FOR 2.92[.115] TO 4.32[.170] WIRE INSULATION DIA.

3 MATERIAL TONGUE THK IS 0.79±0.05[.031±.002]

QTY	DESCRIPTION	MATERIAL	PART NO
100	LOOSE PIECE, BOX	INSULATION: NYLON, COLOR BLUE	8-36158-1
5000	36158 ON TAPE	SLEEVE: COPPER PER ASTM B152 TIN PLATE PER ASTM B545	2-36158-1
1000	WIRE TERMINAL	BODY: COPPER PER ASTM B152 TIN PLATE PER ASTM B545	36158

AMP INCORPORATED
CUSTOMER SERVICE SYSTEMS

FOR ADDITIONAL PRODUCT INFORMATION OR COPIES OF DRAWINGS AND TECHNICAL DOCUMENTS	PRODUCT INFORMATION CENTER 1-800-522-6752
FOR APPLICATION TOOLING INFORMATION	TOOLING ASSISTANCE CENTER 1-800-722-1111
FOR ORDER ENTRY	1-800-526-5142

MAX RECOMMENDED OPERATING TEMPERATURE: 105°C[221°F] MAX

VOLTAGE RATING: 300 V MAX

WIRE CROSS SECTIONAL AREA RANGE: 1.04-2.62mm² [2050-5180] CIR MILS SOLID OR STRANDED

THIS DRAWING IS A CONTROLLED DOCUMENT.

DIMENSIONS: mm [INCHES]

TOLERANCES UNLESS OTHERWISE SPECIFIED:

0 PLC	± -
1 PLC	± -
2 PLC	± -
3 PLC	± 0.20[.008]
4 PLC	± -
ANGLES	± 5°

MATERIAL: SEE TABLE

FINISH: SEE TABLE

DWN	jr ruth	17MAR09
CHK	TOM MICHIELUTTI	17MAR09
APVD	TOM MICHIELUTTI	17MAR09
PRODUCT SPEC	—	
APPLICATION SPEC	—	
WEIGHT	—	

TE Connectivity

NAME: TERMINAL, PIDG
RING TONGUE, WIRE SIZE 16-14 AWG

SIZE	CAGE CODE	DRAWING NO	RESTRICTED TO
A3	00779	C-36158	—

CUSTOMER DRAWING | SCALE 8:1 | SHEET 1 OF 1 | REV E3

1470-19 (3/11)