THIS DRAWING IS UNPUBLISHED. RELEASED FOR PUBLICATION
© COPYRIGHT 2003 BY TYCO ELECTRONICS CORPORATION. ALL RIGHTS RESERVED.

LOC	DIST
A1	-

REVISIONS

F	LTR	DESCRIPTION	DATE	DWN	APVD
	G4	SEE PCN EGA0-1908-04-1	24AUG2004	M.K.	KR
	G5	SEE PCN EGA0-1927-04-1	25AUG2004	M.K.	KR
	H	SEE PCN EGA0-2426-04. CHROME 6 FREE	01NOV2004	GP	KR
	H1	EGA0-2768-04	10DEC2004	KR	GM

NOTES:
Bemerkungen:

1 TORQUEMOMENT FULLY POPULATED WITH TIN TERMINALS: 3.2Nm±0.5Nm
Drehmoment zum Schliessen der Kupplung mit verzinnten Kontakten bei Kompletbestueckung: 3.2Nm±0.5Nm

2 THE BOLT HEAD WILL SHEAR OFF AT A VALUE FROM 4.5Nm TO 5.9 Nm
Der Schraubenkopf wird in einem Bereich von 4.5 Nm bis 5.9 Nm abgeschert

3 TORQUEMOMENT FOR POWER TOOL: 7.0N m±1.1Nm
Drehmoment fuer Drehmomentschluessel: 7.0 Nm±1.1Nm

△ WARPAGE DOWN TO 32.5mm PERMITTED
Einfall bis 32.5mm zulaessig

△ FOR PN 1-1355992-1 THE SHOWN ASSY NUMBER ON PART WILL BE 0-1355992-1
Fuer PN 1-1355991-1 wird auf dem Teil die Assy Nummer 0-1355992-1 verwendet

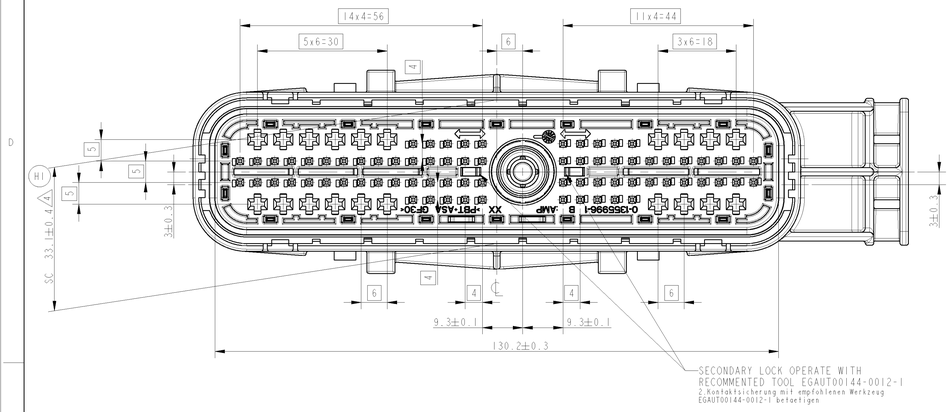

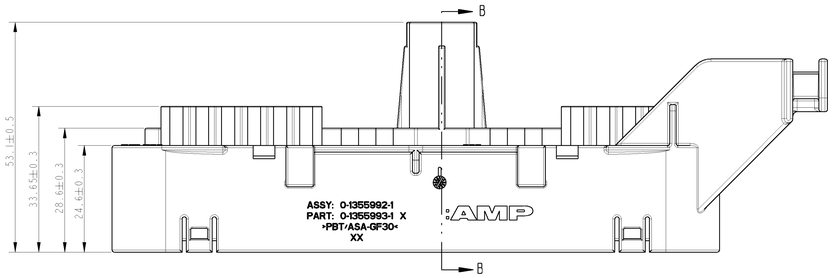

B-B

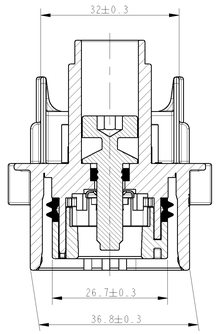

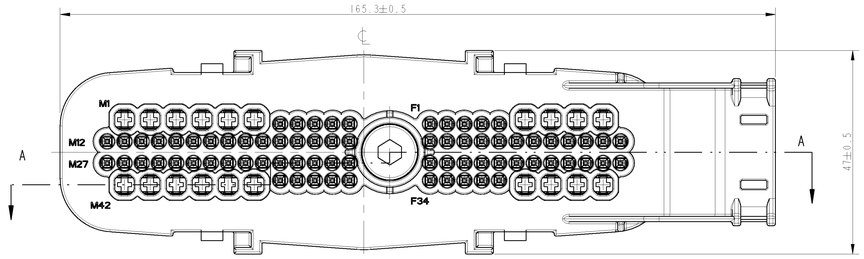

A-A

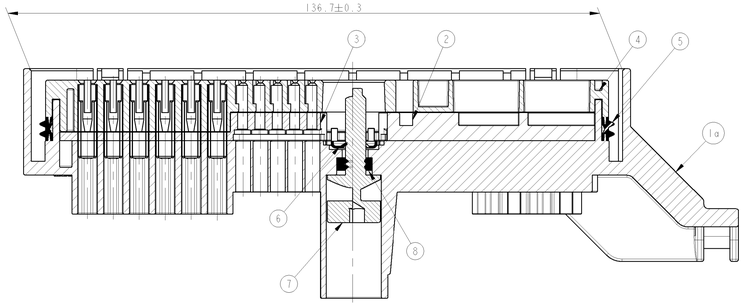

					0-1355989-1	1-1355992-1	94POS.SOCKET HOUSING (ALL CAV. OPEN)	5 H1
					0-1355989-1	0-1355992-3	94POS.SOCKET HOUSING	
					0-1355989-1	0-1355992-2	94POS.SOCKET HOUSING	
					0-1355989-1	0-1355992-1	94POS.SOCKET HOUSING (ALL CAV. OPEN)	
					-	-	-	
					MATED WITH	TYCO ASSY NO.	DESCRIPTION	
1x	1x	1x	1x	-	RED	SILICONE	BOLT SEAL	8
1x	1x	-	-	-	NATURE	STEEL	BOLT TORX T30	7a
-	-	1x	1x	-	NATURE	STEEL	SHEAR BOLT (ALLEN SCREW)	7
1x	1x	1x	1x	-	NATURE	STEEL	NUT	6
1x	1x	1x	1x	-	RED	SILICONE	HOUSING SEAL	5
1x	1x	1x	1x	-	BLACK	PBT/ASA-GF30	CAVITY INSERT	4
1x	1x	1x	1x	-	NATURE	PA6.6	SPACER 52POS	3
1x	1x	1x	1x	-	NATURE	PA6.6	SPACER 42POS	2
-	1x	-	-	-	BLACK	PBT/ASA-GF30	SOCKET HOUSING	1c
-	-	1x	-	-	BLACK	PBT/ASA-GF30	SOCKET HOUSING	1b
1x	-	-	1x	-	BLACK	PBT/ASA-GF30	SOCKET HOUSING	1a
NO OF ITEM					COLOR	MATERIAL	DESCRIPTION	ITEM NO.

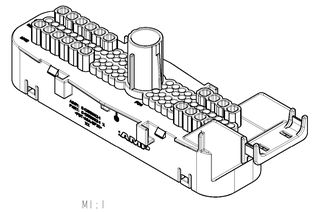

M1:1

0-1355992-3

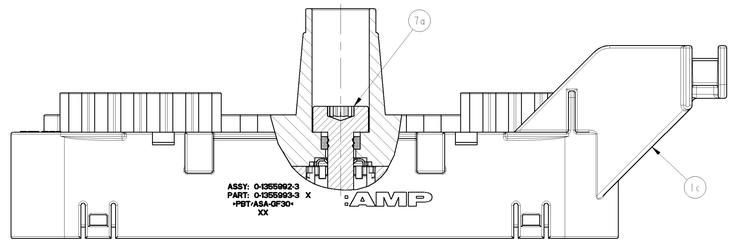

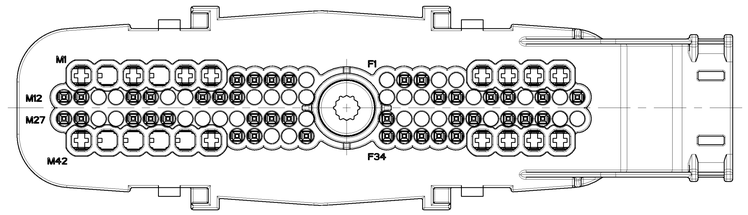

0-1355992-2

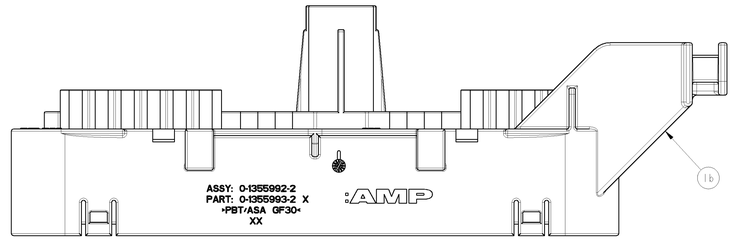

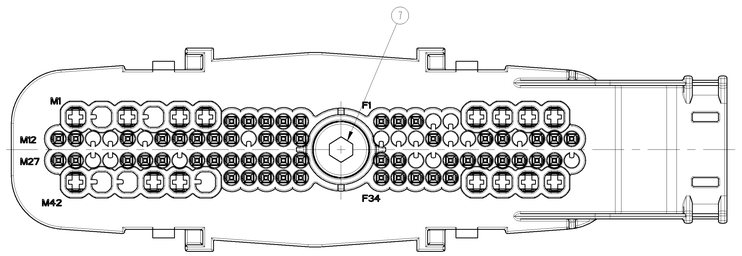

- | AS SHOWN
wie gezeichnet

| | M1 | M2 | M3 | M4 | M5 | M6 | M7 | M8 | M9 | M10 | M11 | M12 | M13 | M14 | M15 | M16 | M17 | M18 | M19 | M20 | M21 | M22 | M23 | M24 | M25 | M26 | M27 | M28 | M29 | M30 | M31 | M32 | M33 | M34 | M35 | M36 | M37 | M38 | M39 | M40 | M41 | M42 | M43 | M44 | M45 | M46 | M47 | M48 | M49 | M50 | M51 | M52 | F1 | F2 | F3 | F4 | F5 | F6 | F7 | F8 | F9 | F10 | F11 | F12 | F13 | F14 | F15 | F16 | F17 | F18 | F19 | F20 | F21 | F22 | F23 | F24 | F25 | F26 | F27 | F28 | F29 | F30 | F31 | F32 | F33 | F34 | F35 | F36 | F37 | F38 | F39 | F40 | F41 | F42 |
|---|---|---|---|---|---|---|---|---