THIS DRAWING IS UNPUBLISHED. RELEASED FOR PUBLICATION -,- .
© COPYRIGHT - By - ALL RIGHTS RESERVED.

| LOC | DIST |
|---|---|
| G | 14 |

REVISIONS

| P | LTR | DESCRIPTION | DATE | DWN | APVD |
|---|---|---|---|---|---|
| | B2 | REVISED PER ECO-11-004820 | 11MAR11 | RK | HMR |

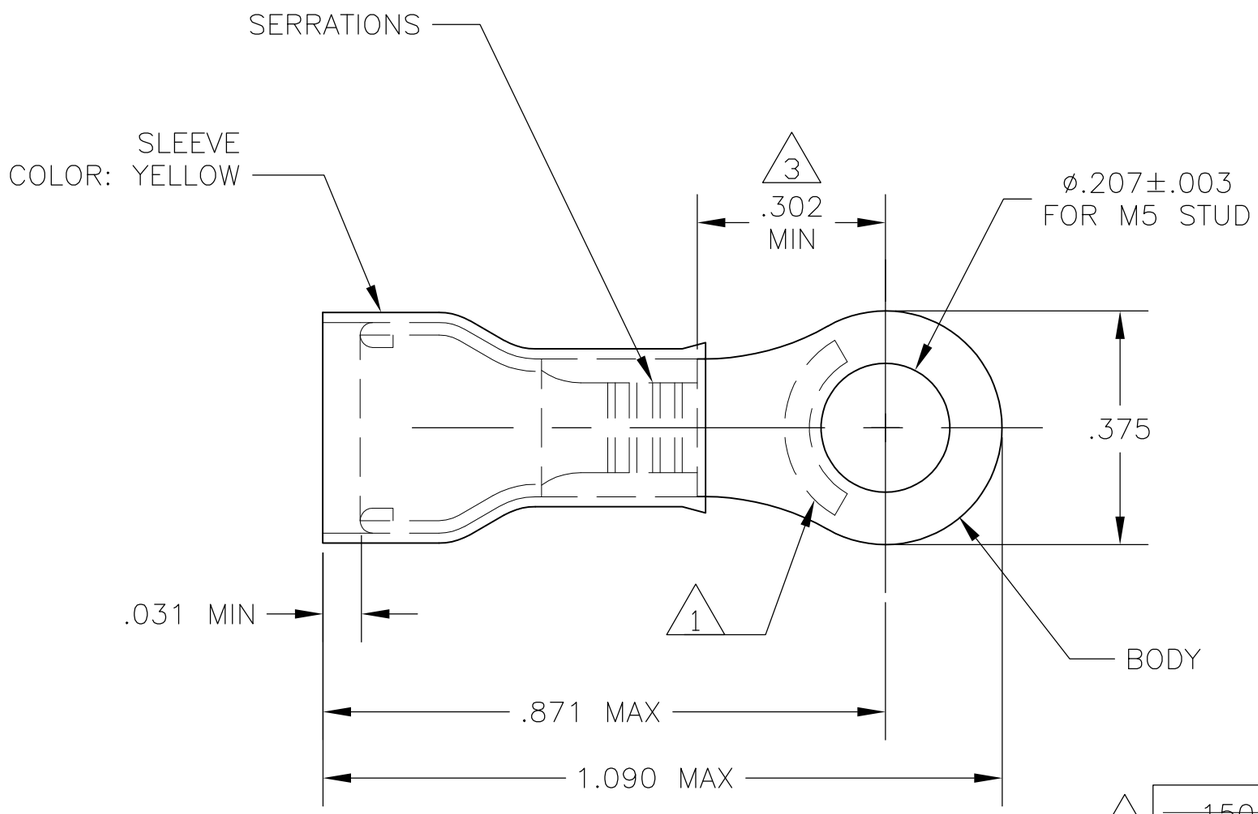


1. STAMP "AMP 12-10*", LOCATION APPROX AS SHOWN.
2. TONGUE THICKNESS IS .039±.002
3. APPLIES TO EDGE OF METAL WIRE BARREL TO CENTER OF STUD HOLE.
4. FOR AMP BRAZIL PRODUCTION ONLY
5. BODY - COPPER PER ASTM B-152
   SLEEVE - COPPER PER ASTM B-152
   INSULATION - NYLON
6. BODY - TIN PL PER ASTM B-545
   SLEEVE - TIN PL PER ASTM B-545
   INSULATION - COLOR - YELLOW
7. 105°C MAX OPERATING TEMPERATURE.
8. 300 VOLT MAX
9. 2.62-6.64mm2 [5,180 - 13,100 CMA]
   SOLID OR STRANDED
10. OBSOLETE PARTS: OBSOLETE CIS STREAMLINING PER D.RENAUD/D.SINISI

| WIRE INSULATION OD RANGE | QTY | PACKAGE TYPE | PART NO |
|---|---|---|---|
| ~~.150-.250~~ (10) | ~~25~~ | ~~LOOSE PIECE~~ | ~~8-130171-1~~ |
| .150-.250 | 2500 | REELED ON TAPE | 2-130171-1 |
| .170-.300 | - | LOOSE PIECE | (4) 130171-1 |
| .150-.250 | 500 | LOOSE PIECE | 130171 |

THIS DRAWING IS A CONTROLLED DOCUMENT.

DIMENSIONS: INCHES

TOLERANCES UNLESS OTHERWISE SPECIFIED:

| | |
|---|---|
| 0 PLC | ± - |
| 1 PLC | ± - |
| 2 PLC | ± - |
| 3 PLC | ± .008 |
| 4 PLC | ± - |
| ANGLES | ± 5° |

MATERIAL (5) FINISH (6)

| | | |
|---|---|---|
| DWN | jr ruth | 20FEB06 |
| CHK | T MICHIELUTTI | 20FEB06 |
| APVD | T MICHIELUTTI | 20FEB06 |
| PRODUCT SPEC | — | |
| APPLICATION SPEC | — | |
| WEIGHT | — | |

TE Connectivity

NAME: TERMINAL RING TONGUE, PIDG, WIRE SIZE 12:10 —

| SIZE | CAGE CODE | DRAWING NO | RESTRICTED TO |
|---|---|---|---|
| A3 | 00779 | C-130171 | — |

CUSTOMER DRAWING | SCALE 4:1 | SHEET 1 OF 1 | REV B2