THIS DRAWING IS UNPUBLISHED. RELEASED FOR PUBLICATION -,- .
© COPYRIGHT - BY TYCO ELECTRONICS CORPORATION. ALL RIGHTS RESERVED.

| LOC | DIST |
|---|---|
| CM | 00 |

REVISIONS

| P | LTR | DESCRIPTION | DATE | DWN | APVD |
|---|---|---|---|---|---|
| | O | REVISED PER 0G3B-1111-04 | 27JUNE05 | KW | DC |
| | O1 | REVISED PER ECO-09-024927 | 06NOV09 | KK | AEG |

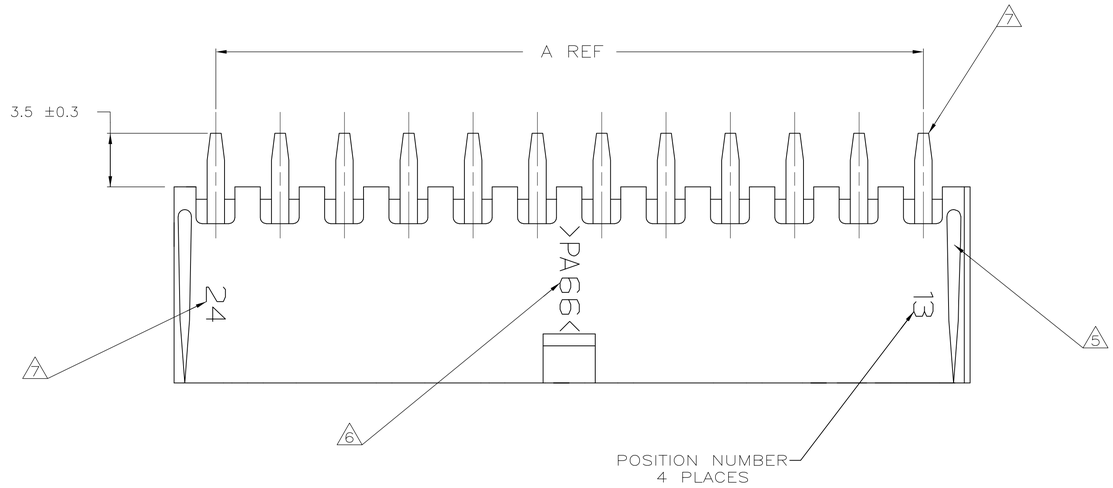


1. MATERIAL: HOUSING – NYLON, UL94V-2 (COLOR – NATURAL, COLOR OF PARTS MAY VARY). CONTACTS – 0.25 THK COPPER ALOY.
2. CONTACT FINISH: 0.00076 MIN THK GOLD PLATE ON PIN MATING SURFACE, 0.003 MIN THK TIN PLATE ON SOLDER TAIL, ALL OVER 0.00127 MIN THK NICKEL BASE PLATE.
3. SOLDER TAIL MEETS AMP SOLDERABILITY SPECIFICATION 109-11-2.
4. MATES WITH SIMILARLY PLATED AMP-DUAC ™ POWER CONNECTOR RECEPTACLE HOUSINGS/SOCKET CONTACTS.
5. RIBS ON FOUR CORNERS OPTIONAL.
6. AMP LOGO AND MATERIAL ID MAY BE LOCATED ON EITHER LONG SIDE OF PART.
7. SIZE, SHAPE OR STYLE OF THIS FEATURE MAY VARY.
8. OBSOLETE PARTS: OBSOLETE CIS STREAMLINING PER D.RENAUD/D.SINISI

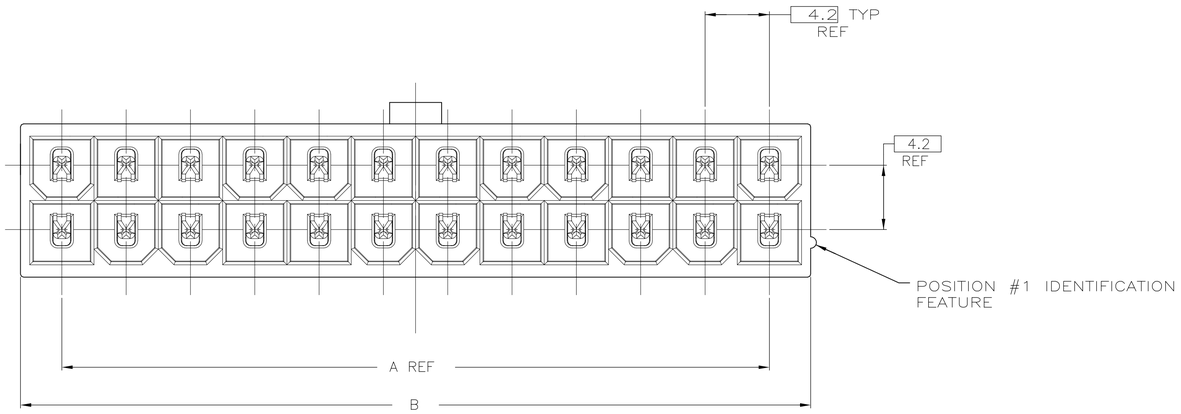


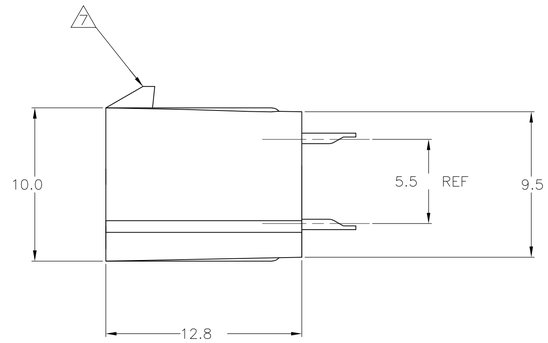


| | | | | |
|---|---|---|---|---|
| OBSOLETE 8 | 51.6 | 46.2 | 24 | 2-1586492-4 |
| | 47.4 | 42.0 | 22 | 2-1586492-2 |
| | 43.2 | 37.8 | 20 | 2-1586492-0 |
| | 39.0 | 33.6 | 18 | 1-1586492-8 |
| | 34.8 | 29.4 | 16 | 1-1586492-6 |
| OBSOLETE 8 | 30.6 | 25.2 | 14 | 1-1586492-4 |
| | 26.4 | 21.0 | 12 | 1-1586492-2 |
| | 22.2 | 16.8 | 10 | 1-1586492-0 |
| | 18.0 | 12.6 | 8 | 1586492-8 |
| OBSOLETE 8 | 13.8 | 8.4 | 6 | 1586492-6 |
| | 9.6 | 4.2 | 4 | 1586492-4 |
| | 5.4 | 0.0 | 2 | 1586492-2 |
| | B | A | NO. OF POSITIONS | PART NO |

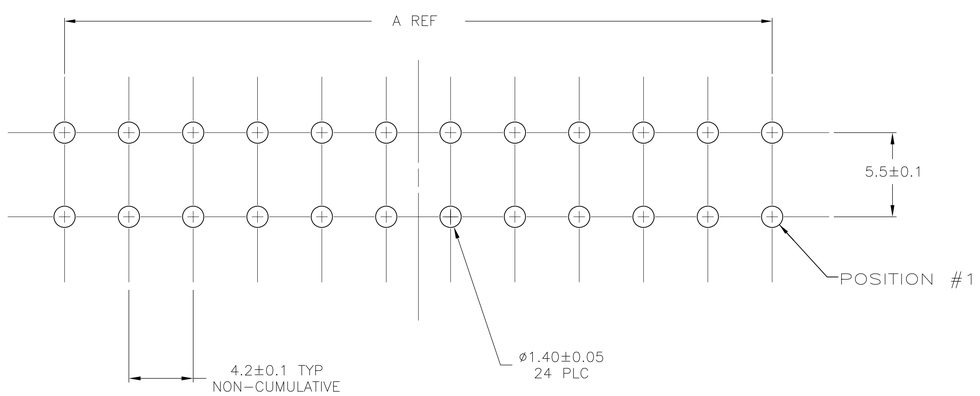


RECOMMENDED MOUNTING HOLE PATTERN
FOR 1.78 MAX THICK P.C. BOARD
COMPONENT SIDE SHOWN

METRIC

THIS DRAWING IS A CONTROLLED DOCUMENT.

DIMENSIONS: mm

TOLERANCES UNLESS OTHERWISE SPECIFIED:
0 PLC ± –
1 PLC ± 0.2
2 PLC ± 0.13
3 PLC ± –
4 PLC ± –
ANGLES ± 0°30'

MATERIAL 1 FINISH 2

DWN K. WHITAKER 20JUNE2005
CHK D. COLEY 20JUNE2005
APVD D. COLEY 20JUNE2005
PRODUCT SPEC 108-1699
APPLICATION SPEC –
WEIGHT –

Tyco Electronics
Tyco Electronics Corporation
Harrisburg, Pa 17105-3608

NAME ASSEMBLY, HEADER, VERTICAL, GOLD PLATED, W/O PEGS, W/O DRAIN HOLES, 94V-2,AMP-DUAC

| SIZE | CAGE CODE | DRAWING NO | RESTRICTED TO |
|---|---|---|---|
| A1 | 00779 | C-1586492 | – |

CUSTOMER DRAWING SCALE 5:1 SHEET 1 OF 1 REV O1

AMP 4805 REV 31MAR2000

28JUN05 8:56am us019538 H:\0G3B-1111-04\1586492_1_c.dwg