THIS DRAWING IS UNPUBLISHED. RELEASED FOR PUBLICATION -,- .
© COPYRIGHT - By - ALL RIGHTS RESERVED.

LOC	DIST
AD	00

REVISIONS

P	LTR	DESCRIPTION	DATE	DWN	APVD
	B1	REVISED PER ECO-11-004587	11MAR11	RK	HMR

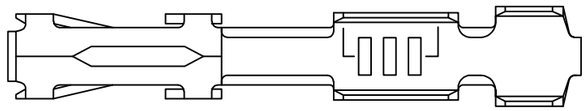

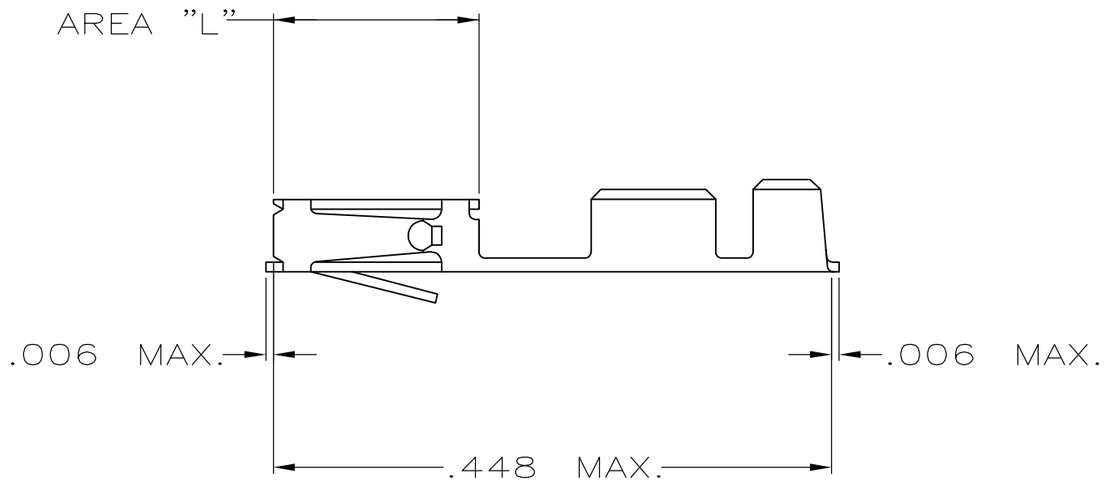

1. LOOSE PIECE TERMINAL MUST MEET ALL APPLICABLE STRIP SPECIFICATIONS IN ADDITION TO THOSE SHOWN.

2. .000030 MIN. GOLD OVER .000050-.000100 NICKEL.

3. GOLD FLASH OVER .000050-.000100 NICKEL .000030 GOLD ON CONTACT AREA.

4. PREPLATING: .000078-.000158 BRIGHT TIN (HALT) PER 112-20-6

5. .000050 GOLD OVER .000050-.000100 NICKEL.

6. GOLD FLASH OVER .000050-.000100 NICKEL .000015 GOLD ON CONTACT AREA.

7. GOLD FLASH ON AREA "L" .000050 GOLD ON CONTACT AREA. ALL OVER .000050-.000100 NICKEL ENTIRE CONTACT.

		-	-
OBSOLETE	7	1-87666-6	87667-6
	6	87666-5	87667-5
	5	87666-4	87667-4
	4	87666-3	87667-3
	3	87666-2	87667-2
	2	87666-1	87667-1
	FINISH	MAKE FROM STRIP PART NO.	PART NUMBER

THIS DRAWING IS A CONTROLLED DOCUMENT.

DIMENSIONS: INCHES

TOLERANCES UNLESS OTHERWISE SPECIFIED:

0 PLC	± -
1 PLC	± -
2 PLC	± .02
3 PLC	± .005
4 PLC	± .0005
ANGLES	± 0°30'

MATERIAL: SEE TABLE

FINISH: SEE TABLE

DWN M.BINNER 27JUN06
CHK D.ROHDE 27JUN06
APVD D.ROHDE 27JUN06
PRODUCT SPEC —
APPLICATION SPEC —
WEIGHT —

TE Connectivity

NAME: CONTACT,FEMALE,MOD IV, CRIMP SNAP-IN (LOOSE PIECE)

SIZE	CAGE CODE	DRAWING NO	RESTRICTED TO
A3	00779	C-87667	—

CUSTOMER DRAWING

SCALE	SHEET	REV
8:1	1 OF 1	B1