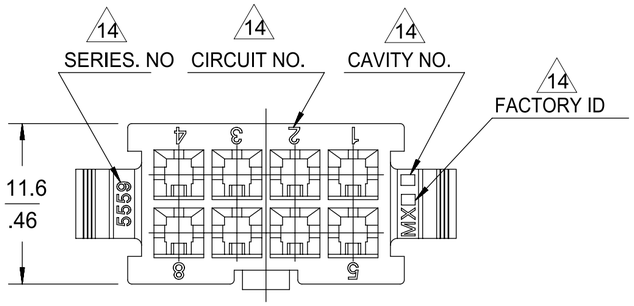

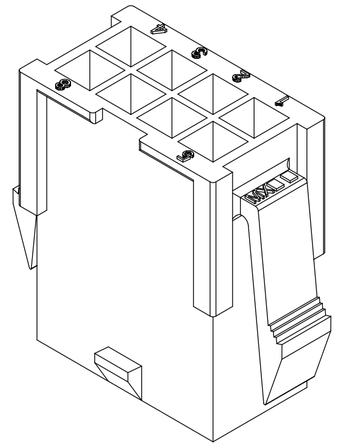

8 CKT SHOWN

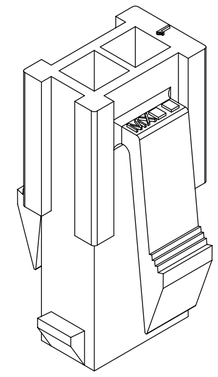

2 CKT SHOWN

NOTES:
1) MATERIAL:
"BLANK" = NYLON 6/6, 94V-2, COLOR: NATURAL.
"BL" = NYLON 6/6, 94V-2, COLOR: BLACK.
"BU" = NYLON 6/6, 94V-2, COLOR: BLUE.
"RE" = NYLON 6/6, 94V-2, COLOR: RED.
"210" = NYLON 6/6, 94V-0, COLOR: NATURAL.
"400" = NYLON 6/6, 94V-0, COLOR: BLACK.
2) FINISH: NOT APPLICABLE
3) PRODUCT SPECIFICATION: PS-5556-001
4) PACKAGING: BULK
5) PART MATES WITH MOLEX RECEPTACLE #5557.
6) PART TO BE USED WITH MOLEX MALE TERMINAL #5558.
7) PART IS NOT DESIGNED FOR CURRENT SHARING.
8) CONNECTORS ARE NOT TO BE MATED OR UNMATED WHILE CIRCUITS ARE LIVE.
9) WIRES ARE TO BE DRESSED IN SUCH A MANNER TO ALLOW THE TERMINALS TO FLOAT FREELY IN THE POCKET.
10) PART CONFORMS TO CLASS "B" REQUIREMENTS OF COSMETIC SPECIFICATION PS-45499-002 WITH THE EXCEPTION OF DISCOLORATION, FLASH AND SINK MEET CLASS "C" REQUIREMENTS.
11 ON 2 CIRCUITS PARTS THIS DIMENSION IS ALLOWABLE UP TO "D" DIMENSION.
12 PANEL HOLE TO BE PUNCHED OUT IN THE SAME DIRECTION AS INSERTION INTO THE PANEL.
13 TO BE MEASURED AT SURFACE -A-
14 TEXT ON PART IS FOR REFERENCE ONLY. TEXT AND TEXT LOCATION MAY VARY DEPENDING ON PART NUMBER AND/OR TOOL.

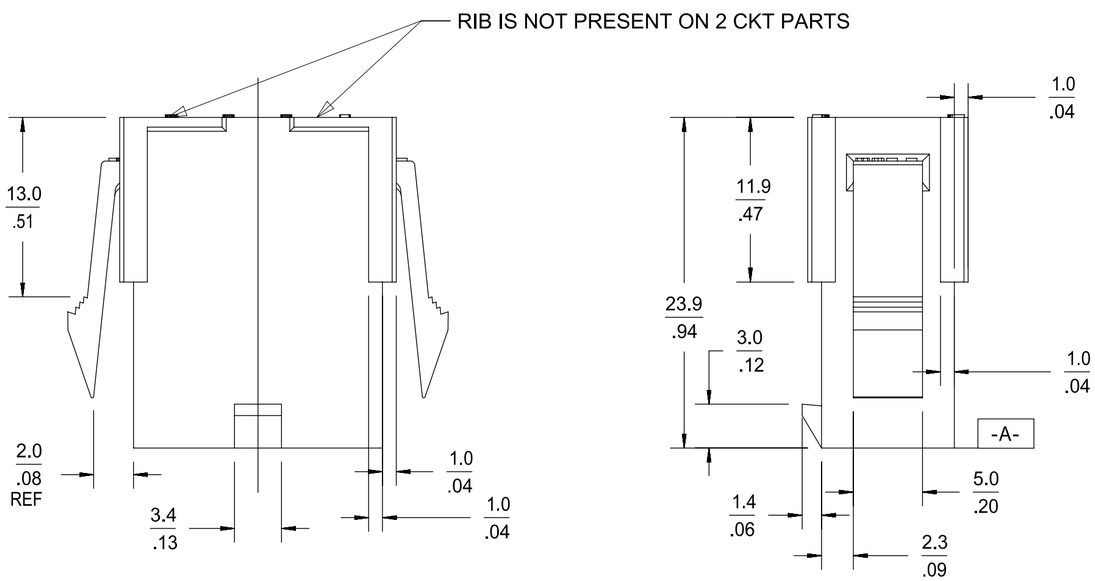

LEGEND

5559-** P - *

BASE NO

CIRCUIT SIZE 02-24)

HOUSING TYPE: PLUG WITH MOUNTING EARS

MATERIAL OPTION: (SEE NOTE 1)

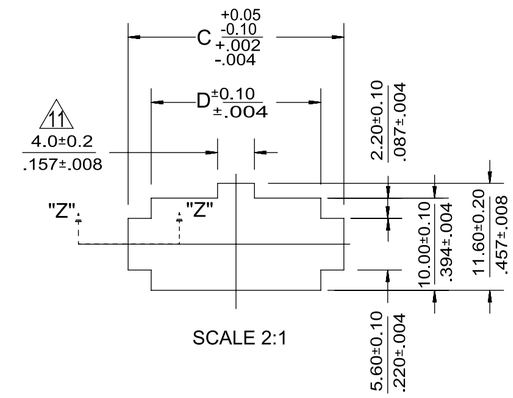

SCALE 2:1

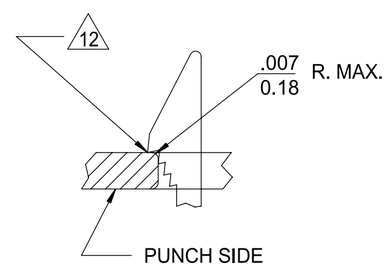

SECTION "Z"-"Z"
NO SCALE

12 RECOMMENDED PANEL HOLE DIMENSIONS
(THICKNESS : 0.8-2.0/.032-.079)

52.1/2.051	57.0/2.244	51.6/2.031	46.2/1.819	24
47.9/1.886	52.8/2.079	47.4/1.866	42.0/1.654	22
43.7/1.720	48.6/1.913	43.2/1.701	37.8/1.488	20
39.5/1.555	44.4/1.748	39.0/1.535	33.6/1.323	18
35.3/1.390	40.2/1.583	34.8/1.370	29.4/1.158	16
31.1/1.224	36.0/1.417	30.6/1.205	25.2/.992	14
26.8/1.055	31.8/1.252	26.4/1.039	21.0/.827	12
22.6/.890	27.6/1.087	22.2/.874	16.8/.661	10
18.4/.724	23.4/.921	18.0/.709	12.6/.496	8
14.2/.559	19.2/.756	13.8/.543	8.4/.331	6
10.0/.394	15.0/.591	9.6/.378	4.2/.165	4
5.8/.228	10.8/.425	5.4/.213	—	2
D	C	B	A	CIRCUIT

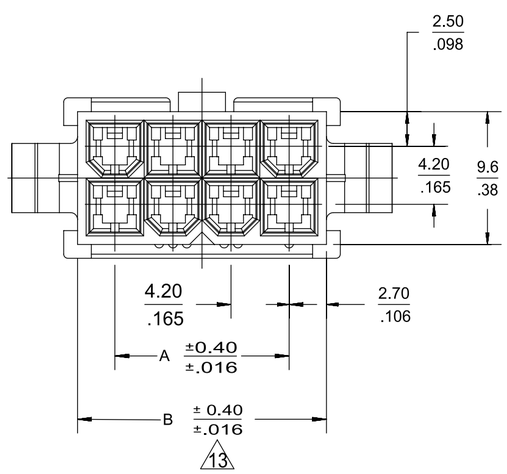

QUALITY SYMBOLS
FA = 0
FC = 0
FB = 0
▼ = 0
C = 0
☒ = 0
■ = 0
C = 0

THIS DRAWING CONTAINS INFORMATION THAT IS PROPRIETARY TO MOLEX ELECTRONIC TECHNOLOGIES, LLC AND SHOULD NOT BE USED WITHOUT WRITTEN PERMISSION

EC NO:	102682	ADD 39028066
DRWN:	CSLAFTER	2016/10/06
CHK'D:	JBELL	2016/10/27
APPR:	FSMITH	2016/11/02
REV	J8	

GENERAL TOLERANCES (UNLESS SPECIFIED)

	MM	INCH
4 PLACES	±	±
3 PLACES	±	± 0.012
2 PLACES	± 0.3	± 0.016
1 PLACES	± 0.4	±
0 PLACES	±	±

ANGULAR TOL ± 3.0

DRAFT WHERE APPLICABLE MUST REMAIN WITHIN DIMENSIONS

DIMENSION UNITS: MM/IN
SCALE: 3:1
DRWN BY: H.HIRAMOTO DATE: 1998/10/14
CHK'D BY: Y.YAMADA DATE: 1988/10/21
APPR BY: M.ENOMOTO DATE: 1988/10/24
DRAWING SIZE: C
THIRD ANGLE PROJECTION

molex®

MINI. FIT JR DUAL ROW
2-24CKT PLUG HOUSING WITH EARS

PRODUCT CUSTOMER DRAWING

SERIES	MATERIAL NUMBER	CUSTOMER
5559	SEE CHART	GENERAL MARKET

DOCUMENT NUMBER	DOC TYPE	DOC PART	SHEET NUMBER
SD-5559-NP	PSD	000	1 OF 2

RELEASE STATUS | RELEASE DATE | MODEL EM-5559-000

FORMAT: Engineering-master-lib-pro5-C
REVISION: C
DATE: 2016/02/04

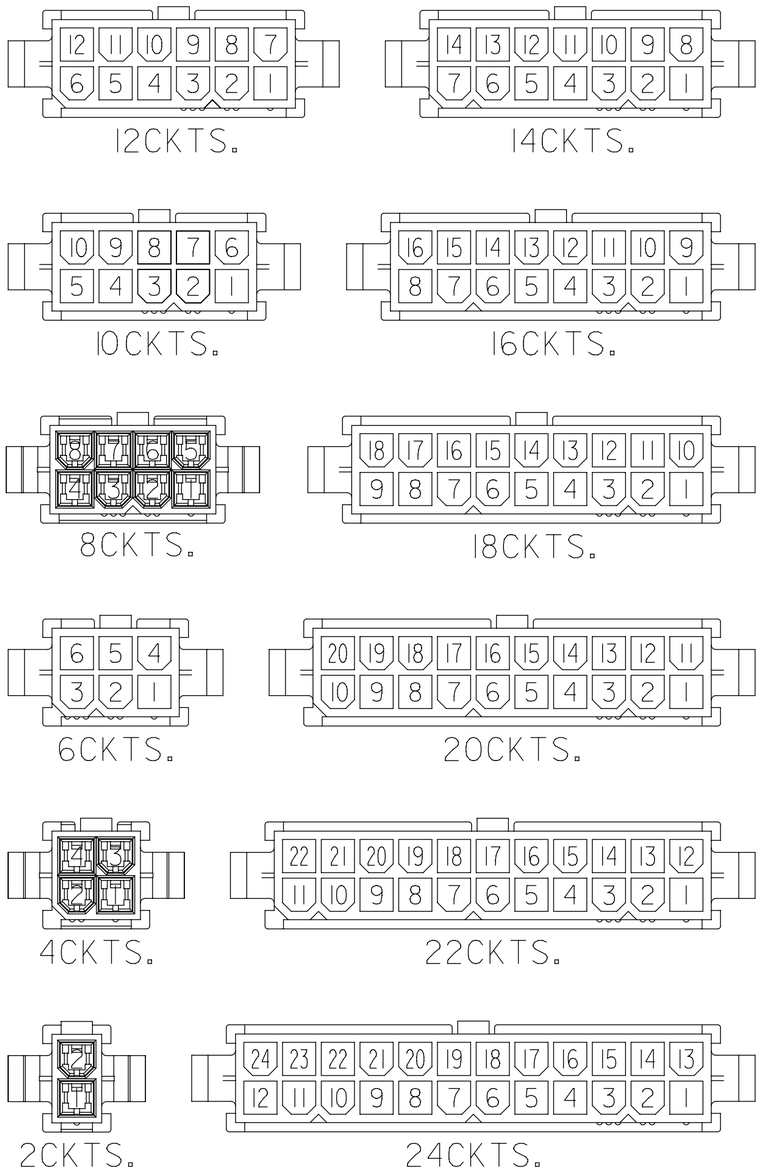

CIRCUIT SIZE LAYOUT (SCALE : 2-1)

V-2 BLACK			V-0 BLACK		
46999-0157	5559-24P-BL	24	46999-0304	5559-24P-400	24
		22	46999-0303	5559-22P-400	22
39-02-8205	5559-20P-BL	20	46999-0302	5559-20P-400	20
		18	46999-0301	5559-18P-400	18
		16	46999-0300	5559-16P-400	16
		14	46999-0299	5559-14P-400	14
		2	46999-0298	5559-12P-400	2
		10	46999-0297	5559-10P-400	10
		8	46999-0296	5559-08P-400	8
39-02-8065	5559-06P-BL	6	46999-0295	5559-06P-400	6
39-02-8045	5559-04P-BL	4	46999-0294	5559-04P-400	4
		2	46999-0293	5559-02P-400	2
EDP NO.	ENG. NO.	CIRCUIT	EDP NO.	ENG. NO.	CIRCUIT

V-2 BLUE			V-2 RED			V-0 NATURAL			V-2 NATURAL		
		24			24	39-01-2246	5559 -24P-210	24	39-01-2241	5559-24P	24
		22			22	-2226	-22P-210	22	-2221	-22P	22
		20			20	-2206	-20P-210	20	-2201	-20P	20
		18			18	-2186	-18P-210	18	-2181	-18P	18
		16			16	-2166	-16P-210	16	-2161	-16P	16
		14			14	-2146	-14P-210	14	-2141	-14P	14
		2			12	-2126	-12P-210	2	-2121	-12P	12
		10			10	-2106	-10P-210	10	-2101	-10P	10
		8			8	-2086	-08P-210	8	-2081	-08P	8
39-02-8066	5559-06P-BU	6	39-02-8067	5559-06P-RE	6	-2066	-06P-210	6	-2061	-06P	6
39-02-8046	5559-04P-BU	4			4	-2046	-04P-210	4	-2041	-04P	4
		2			2	39-01-2026	5559 -02P-210	2	39-01-2021	5559-02P	2
EDP NO.	ENG. NO.	CIRCUIT	EDP NO.	ENG. NO.	CIRCUIT	EDP NO.	ENG. NO.	CIRCUIT	EDP NO.	ENG. NO.	CIRCUIT

QUALITY SYMBOLS

FA	= 0
FC	= 0
FD	= 0
	= 0
C	= 0
	= 0
	= 0
E	= 0

THIS DRAWING CONTAINS INFORMATION THAT IS PROPRIETARY TO MOLEX ELECTRONIC TECHNOLOGIES, LLC AND SHOULD NOT BE USED WITHOUT WRITTEN PERMISSION

ADD 39028066
EC NO: 102682 2016/10/06
DRWN: CSLAFTER 2016/10/27
CHK'D: JBELL 2016/11/02
APPR: FSMITH
REV J8

GENERAL TOLERANCES (UNLESS SPECIFIED)

	MM	INCH
4 PLACES	±	±
3 PLACES	±	± 0.012
2 PLACES	± 0.3	± 0.016
1 PLACES	± 0.4	±
0 PLACES	±	±

ANGULAR TOL ± 3.0

DRAFT WHERE APPLICABLE MUST REMAIN WITHIN DIMENSIONS

DIMENSION UNITS: MM/IN
SCALE: 3:1
DRWN BY: H.HIRAMOTO DATE: 1998/10/14
CHK'D BY: Y.YAMADA DATE: 1988/10/21
APPR BY: M.ENOMOTO DATE: 1988/10/24
DRAWING SIZE: C
THIRD ANGLE PROJECTION

molex

MINI. FIT JR DUAL ROW
2-24CKT PLUG HOUSING WITH EARS

PRODUCT CUSTOMER DRAWING

SERIES	MATERIAL NUMBER	CUSTOMER
5559	SEE CHART	GENERAL MARKET

DOCUMENT NUMBER	DOC TYPE	DOC PART	SHEET NUMBER
SD-5559-NP	PSD	000	2 OF 2

RELEASE STATUS	P1	RELEASE DATE	02.11.2016 21:11:46

FORMAT: Engdep-master-tb-pro5-C
REV/BSDN: C
DATE: 2016/02/04