Product number	ROW	Loading view P 1	2	3	4	5	6	7
75853–1YZ	a	X		X		X		X
	b							
	c	X		X		X		X
75853–2YZ	a	X		X		X		X
	b	X		X		X		X
	c	X		X		X		X
75853–3YZ	a	X	X	X	X	X	X	X
	b							
	c	X	X	X	X	X	X	X
75853–4YZ	a	X	X	X	X	X	X	X
	b	X	X	X	X	X	X	X
	c	X	X	X	X	X	X	X
75853–5YZ	a	X						X
	b							
	c	X						X
75853–6YZ	a	X	X	X	X	X	X	X
	b	X	X	X	X	X	X	X
	c							
75853–7YZ	a		X				X	
	b							
	c	X			X			X
75853–8YZ	a	X			X			X
	b							
	c		X				X	
75853–9YZ	a	X	X	X		X	X	X
	b	X		X		X		X
	c	X	X	X		X	X	X

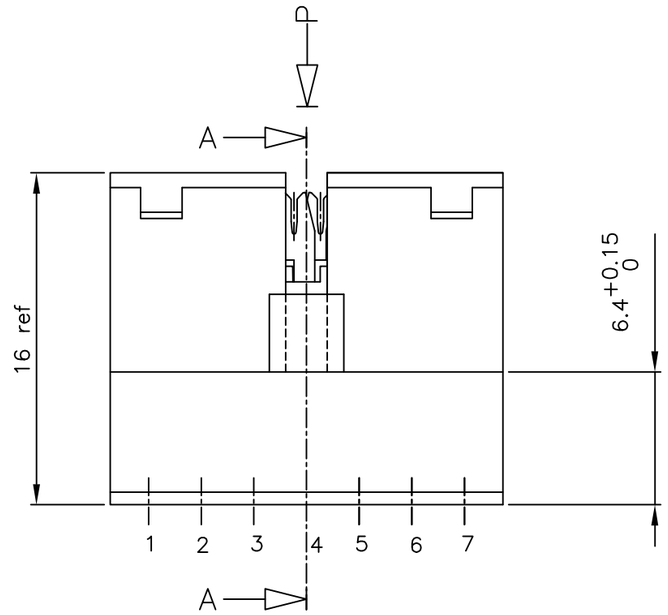

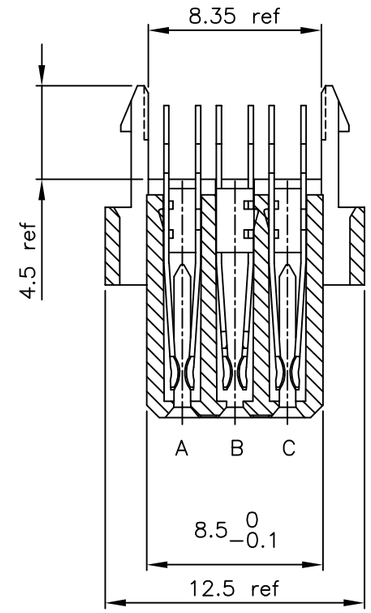

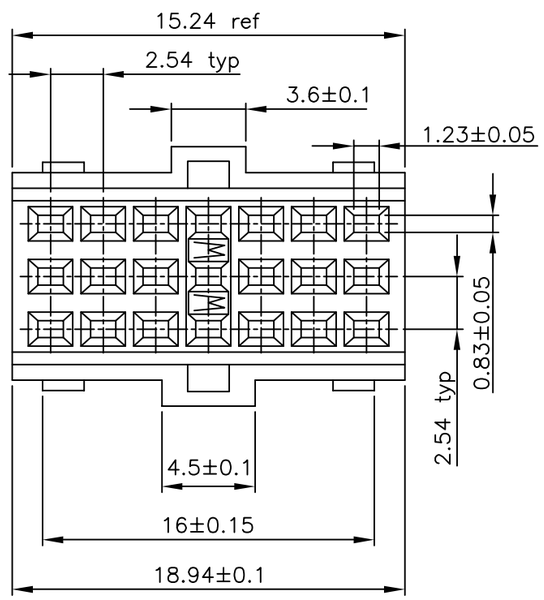

75853–X52	30	1.25 um Au min over3.0 um Ni	0.1–0.2 um Ni
75853–X51	26	1.25 um Au min over3.0 um Ni	0.1–0.2 um Ni
75853–X42	30	2.0 um Au min over 3.0 um Ni	0.1–0.2 um Ni
75853–X41	26	2.0 um Au min over 3.0 um Ni	0.1–0.2 um Ni
75853–X22	30	0.5 um Au min over 3.0 um Ni	0.1–0.2 um Ni
75853–X21	26	0.5 um Au min over 3.0 um Ni	0.1–0.2 um Ni
75853–X12	30	1.0 um Au min over 3.0 um Ni	0.1–0.2 um Ni
75853–X11	26	1.0 um Au min over 3.0 um Ni	0.1–0.2 um Ni
75853–X02	30	3.0 um Au min over 3.0 um Ni	0.1–0.2 um Ni
75853–X01	26	3.0 um Au min over 3.0 um Ni	0.1–0.2 um Ni
PRODUCT CODE YZ	CODE WW see note 3	PLATING CONTACT AREA	PLATING PIERCING AREA

NOTES:
1.MATERIAL HOUSING: POLYESTER 30% GLASS FILLED COLOUR GREY, FLAME RETARDANT PER UL–94–V0
2.MATERIAL CONTACT: PHOSPHOR BRONZE
3.CODE WW ON LEAD IN SIDE OF HOUSING APPLIES TO PIERCING TERMINAL IN RELATION TO AWG SIZE
4.FOR CABLE APPLICATION SEE TA 301
5."LF" SUFFIX TO THE PRODUCT NUMBER FOR LEAD FREE OR RoHS COMPATIBLE PRODUCTS.

NOTE:

1. THIS "LF" PRODUCT MEETS EUROPEAN UNION DIRECTIVES AND OTHER COUNTRY REGULATIONS AS DESCRIBED IN GS-22-008.
2. LEAD FREE OR RoHS DIRECTIVE LABELING TO BE PROVIDED AS PER GS-14-920 FOR LEAD FREE VERSION.

ltr	ecn no	dr	date
D	H00085	MVI	1990–02–23
E	H20154	MVI	1992–03–13
F	H20166	MVI	1992–03–31
G	H20421	MVI	1992–06–16
H	I05–0123	MINI	2005–07–27
J	I06–0082	MINI	2006–06–01

mat'l. code: see notes
surface: ISO 1302
tolerance: ISO 406 ISO 1101
projection
tolerances unless otherwise specified: angles; linear
mm
scale –
dr: M. Visschers 1992–03–13
engr
chr: RAKHEE GEORGE 2006–06–01
appd: RAKHEE GEORGE 2006–06–01
product family: BACKPANEL
title: CableConnector ASSEMBLY 3x7 POS.
dwg no: 75853
sheet 1 of 1
size: A2
type: CUSTOMER Drawing
sheet index: revision J; sheet 1

form: A2

FCIconnect.com
Copyright FCI

PDM: Rev:J STATUS: Released Printed: May 14, 2011