THIS DRAWING IS UNPUBLISHED. RELEASED FOR PUBLICATION -,- .
© COPYRIGHT - By - ALL RIGHTS RESERVED.

LOC	DIST
AF	50

REVISIONS

P	LTR	DESCRIPTION	DATE	DWN	APVD
	R	REVISED PER ECR-13-004343	30JUL13	KH	KR

1 MATES WITH .020±.001X.187 TAB

2 WIRE STRIP LENGTH .281

3 INSULATION SIZE .230 MAX DIA

4 CONTINUOUS STRIP ON REELS

5 DIMENSION DOES NOT INCLUDE TRIM BURR

6 .015 MAX CARRIER TRIM BURR PER SIDE IS ALLOWABLE IN THE SHADED AREA

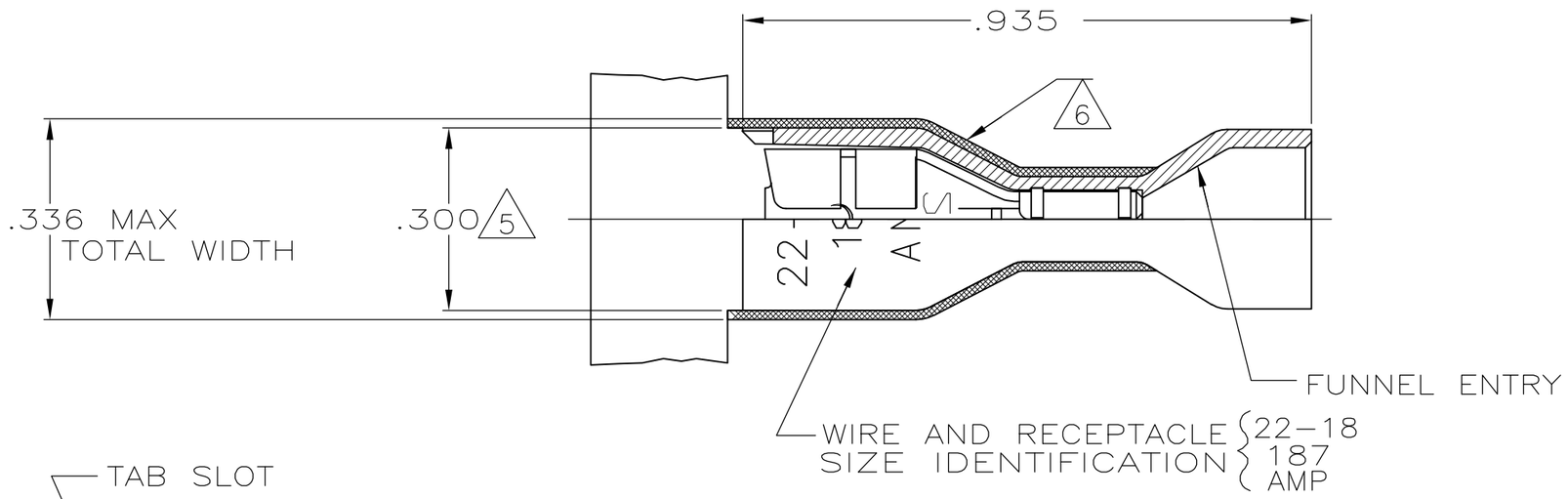

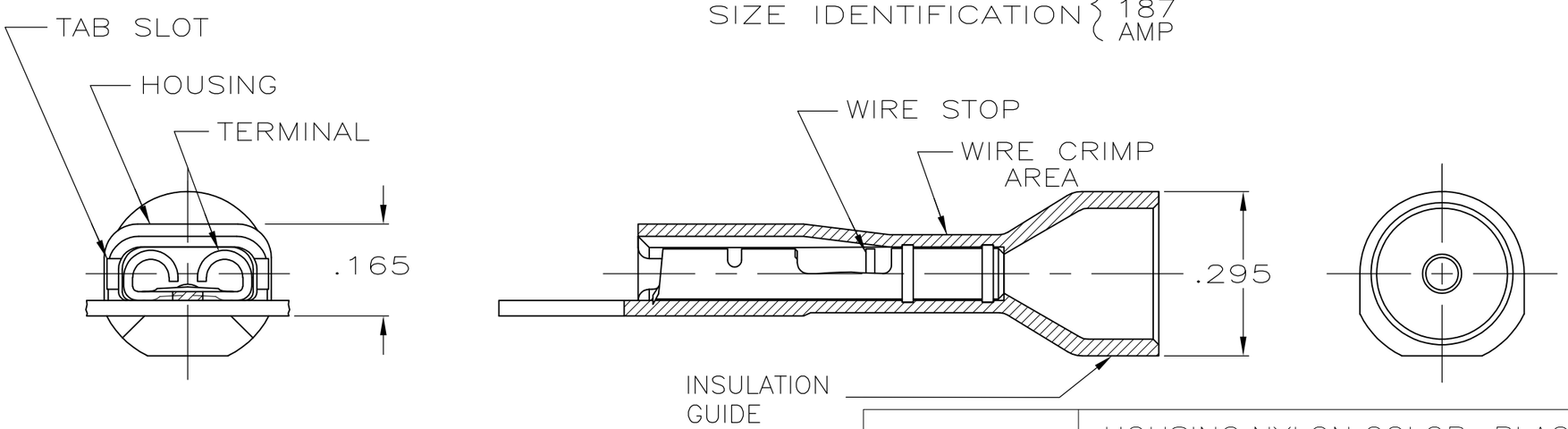

	STANDARD	HOUSING:NYLON,COLOR-BLACK RECEPTACLE:BRASS, TIN	9-520261-2
OBSOLETE	BULK	HOUSING:NYLON,COLOR-RED TRANSLUCENT RECEPTACLE:BRASS, TIN	5-520261-2
	STANDARD		2-520261-2
	PACKAGING	MATERIAL & FINISH	PART NO.

THIS DRAWING IS A CONTROLLED DOCUMENT.

DIMENSIONS: INCHES

TOLERANCES UNLESS OTHERWISE SPECIFIED:

0 PLC	± -
1 PLC	± -
2 PLC	± -
3 PLC	± .015
4 PLC	± -
ANGLES	± -

MATERIAL: SEE TABLE

FINISH: SEE TABLE

DWN	P FORTNEY	11/4/88
CHK	MS FEHER	11/7/88
APVD	T SHUTTER	11/7/88
PRODUCT SPEC	108-2043	
APPLICATION SPEC	114-2123	
WEIGHT	-	

TE Connectivity

NAME: RECEPTACLE ASSY,ULTRA-FAST, .187 SERIES, 22-18 AWG

SIZE	CAGE CODE	DRAWING NO	RESTRICTED TO
A3	00779	C-520261	-

CUSTOMER DRAWING | SCALE 4:1 | SHEET 1 OF 1 | REV R