THIS DRAWING IS UNPUBLISHED. RELEASED FOR PUBLICATION 2006
© COPYRIGHT 2006 BY TYCO ELECTRONICS CORPORATION. ALL RIGHTS RESERVED.

LOC	DIST
A1	-

REVISIONS

P	LTR	DESCRIPTION	DATE	DWN	APVD
	D	SEE E-06-017312	04JUL2006	LN	TK
	D1	SEE E-06-022754	25SEP2006	LN	VB

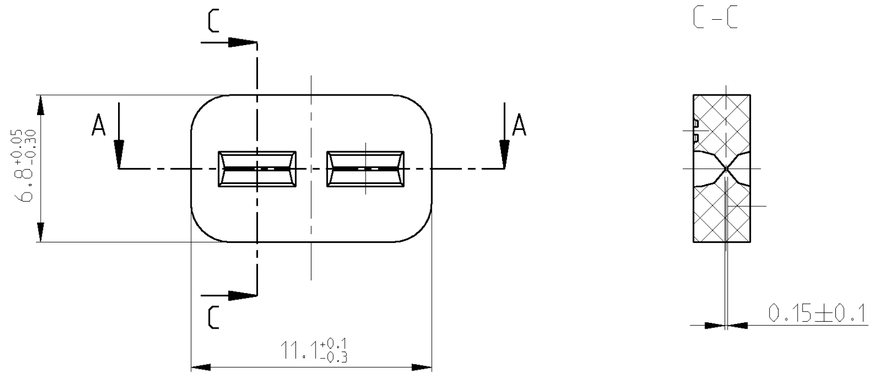

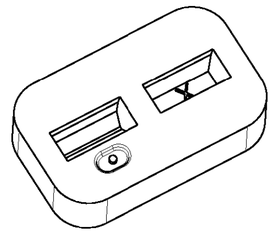

SECTION A-A
Schnitt

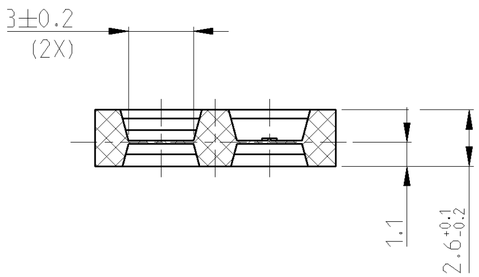

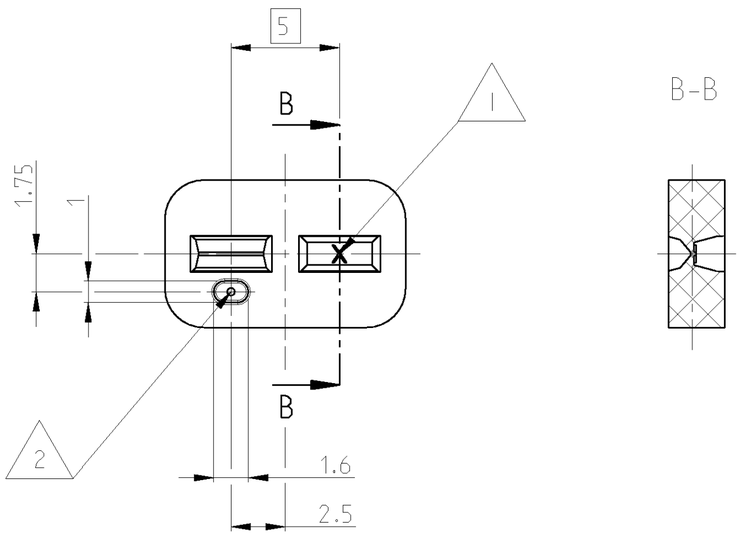

NOTES
Bemerkungen

1. CAVITY MARKING RAISED, OPTIONAL
IN ONE OF THE WINDOWS
Nestmarkierung erhaben, wahlweise
in einem der Fenster

2. GATE AREA SUNK
GATEMARK MUST NOT GET THROUGH OUTER GEOMETRY
Angussbereich vertieft
Anguss darf nicht aus der aeusseren
Geometrie ueberstehen

PART NO	REV	DESCRIPTION	COLOUR	WEIGHT [g]	ITEM
963209-1	D	SEALING	NATURE	0.18	1

THIS DRAWING IS A CONTROLLED DOCUMENT FOR TYCO ELECTRONICS CORPORATION. IT IS SUBJECT TO CHANGE AND THE CONTROLLING ENGINEERING ORGANIZATION SHOULD BE CONTACTED FOR THE LATEST REVISION.

DIMENSIONS: mm

TOLERANCES UNLESS OTHERWISE SPECIFIED:
0 PLC ±0.3
1 PLC ±0.3
2 PLC ±0.3
3 PLC ±-
4 PLC ±-
ANGLES ±2°

MATERIAL: Silicone
FINISH: -

DWN L. Nguyen 04JUL2006
CHK T. Kilian 18JUL2006
APVD D. Duenkel 18JUL2006
PRODUCT SPEC 108-18102
APPLICATION SPEC 114-18175
WEIGHT -

tyco Electronics
tyco Electronics AMP GmbH
64625 Bensheim (Germany)

NAME
SEALING FOR 2POS. JPT HOUSING
Dichtung fuer 2pol. Gehaeuse
-

SIZE	CAGE CODE	DRAWING NO	RESTRICTED TO
A2	00779	C-963209	-

CUSTOMER DRAWING
SCALE 5:1 SHEET 1 OF 1 REV D1