REV.	DATE	DESCRIPTION
NC	02/23/98	INITIAL RELEASE
A	11/13/06	UPDATE DRAWING FORMAT

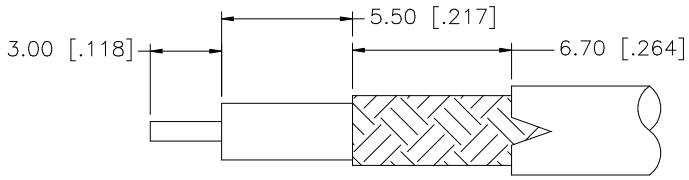

RECOMMENDED
CABLE STRIPPING DIM'S

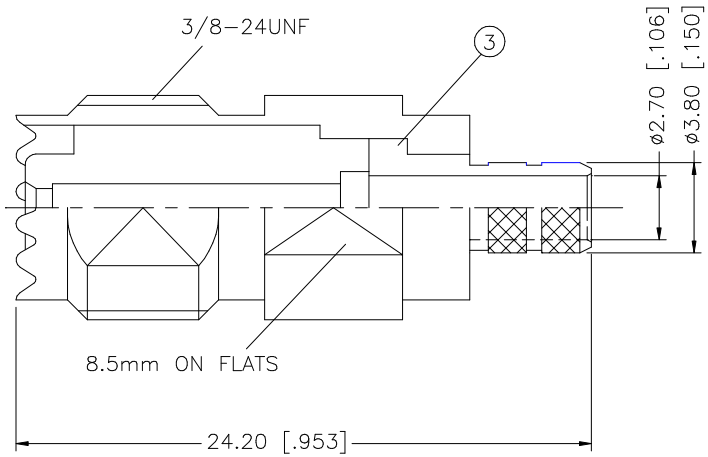

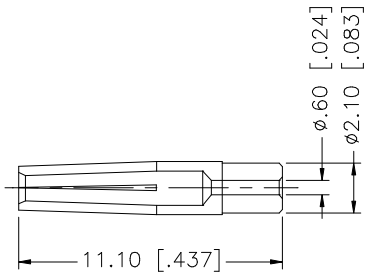

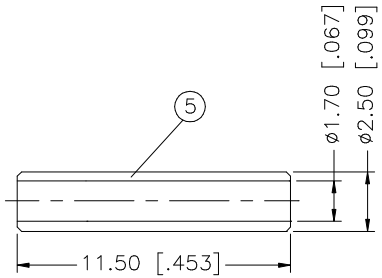

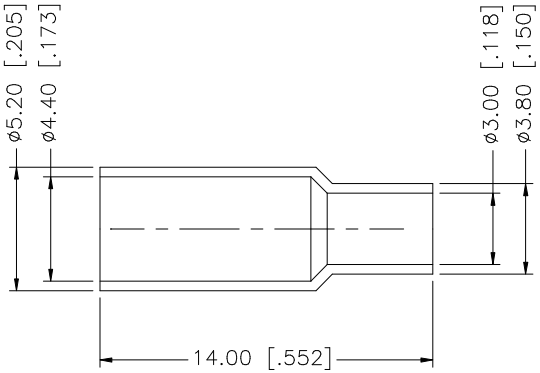

	DESCRIPTION	MATERIAL	FINISH	QTY
8				
7				
6	FERRULE	BRASS	NICKEL	1
5	INSULATOR	DELRIN	NATURAL	1
4	CONTACT PIN	PHOS. BRONZE	GOLD	1
3	INSULATOR	DELRIN	NATURAL	1
2	BARREL	BRASS	NICKEL	1
1	BODY	DIE CAST	NICKEL	1

UNLESS OTHERWISE SPECIFIED DIMENSIONS ARE IN MILLIMETERS. DIMENSIONS IN [ ] ARE IN INCHES AND FOR CUSTOMER REFERANCE ONLY.

UNLESS OTHERWISE SPECIFIED TOLERANCES FOR MILLIMETERS ARE:
0.5 – 8mm ± 0.20mm
8 – 30mm ± 0.40mm
30 – 120mm ± 0.50mm

UNLESS OTHERWISE SPECIFIED TOLERANCES FOR INCHES ARE:
.020 – .315 = ± 0.007"
.315 – 1.180 = ± 0.015"
1.180 – 4.724 = ± 0.020"

DO NOT SCALE DRAWING

APPROVALS		DATE
DRAWN	G.R.S.	11/13/06
CHECKED		
ISSUED		
SHEET	1 OF 1	

CAD FILE C:/182/182117.DWG

Amphenol Connex

PART DESCRIPTION
MINI-UHF CRIMP JACK
(RG-174/U, 316/U, CABLE)

PART NO. 182117

DWG. NO.	REV.	SIZE	SCALE
182117.DWG	A	A	NA