THIS DRAWING IS UNPUBLISHED. RELEASED FOR PUBLICATION 20
© COPYRIGHT 20 BY - ALL RIGHTS RESERVED.

| LOC | DIST |
|---|---|
| - | - |

REVISIONS

| P | LTR | DESCRIPTION | DATE | DWN | APVD |
|---|---|---|---|---|---|
| | A | RELEASE | 19AUG2011 | R.C | E.K |
| | A1 | ADD "GWT REQUIREMENTS" IN NOTE 6. | 11OCT2012 | D.Z | YH.M |
| | | | | | |
| | | | | | |

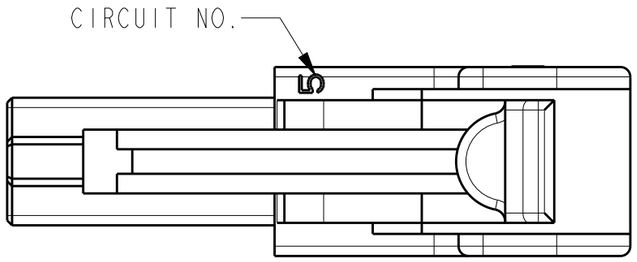


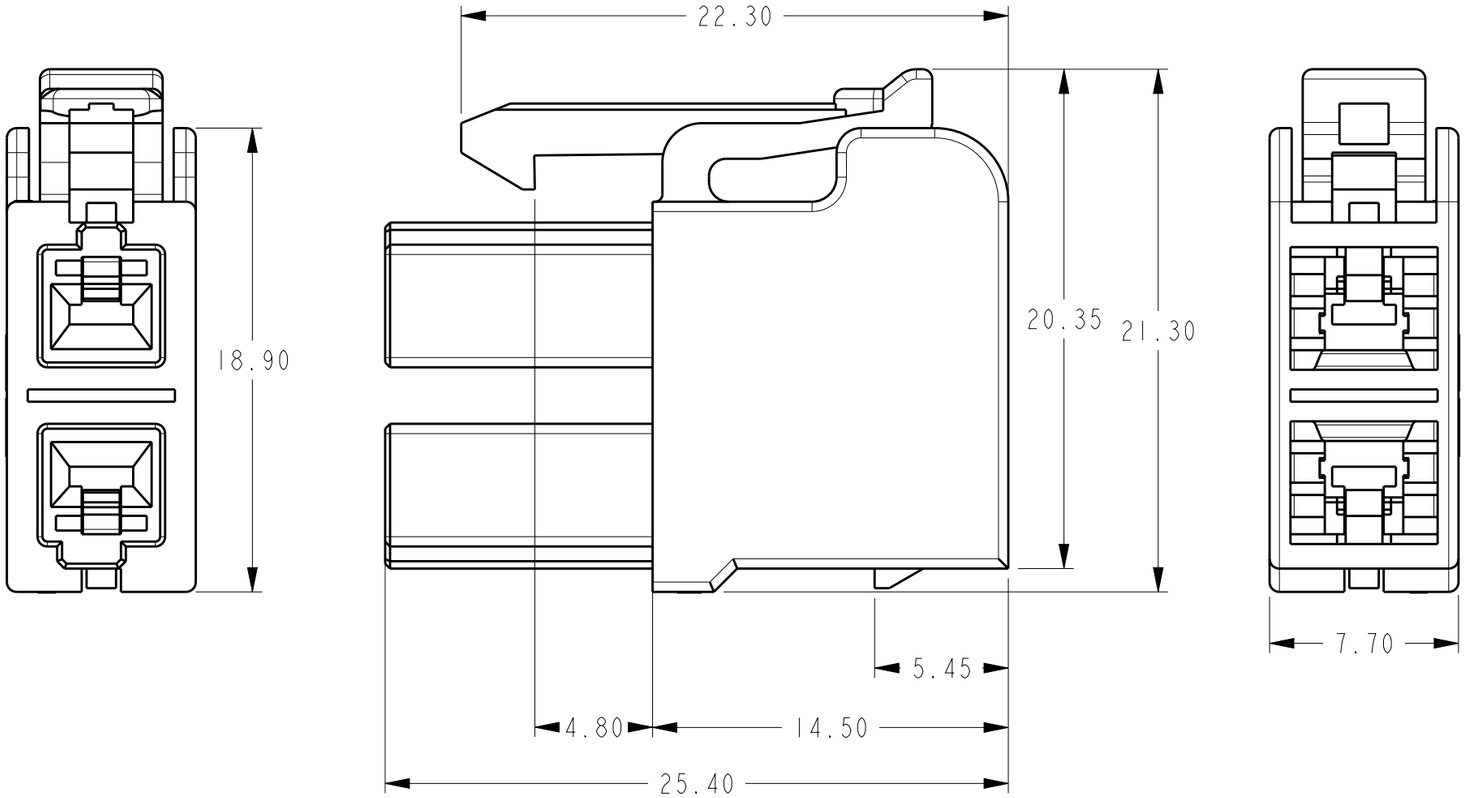


## NOTE

1 MATERIAL:THERMOPLASTIC,UL94 V-0
COLOR:NATURAL

2 PRODUCT SPEC: 108-106071

3 APPLICABLE CONTACT P/N:
REC CONTACT:1983663/4-1

4 MATING CONN. P/N:
HSG:1983658-1

5 APPLICABLE DOUBLE LOCK PLATE P/N:1983665-1

6.PRODUCT COMPLY WITH GLOW WIRE REQUIREMENTS FOR PARTS OF NON-METALLIC MATERIAL SUPPORTING A CURRENT-CARRYING CONNECTION DETAILED IN IEC 60335-1, SECTION 30 (GWT).

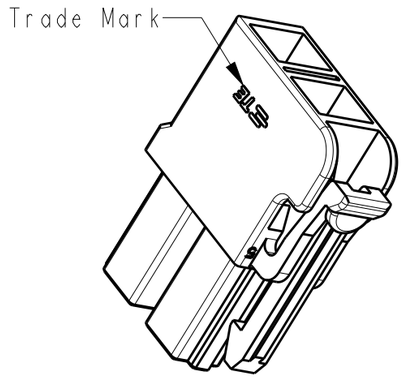


PART NUMBER 1983660-1

THIS DRAWING IS A CONTROLLED DOCUMENT.

DIMENSIONS: mm

TOLERANCES UNLESS OTHERWISE SPECIFIED:

| | |
|---|---|
| 0 PLC | ±- |
| 1 PLC | ±- |
| 2 PLC | ±0.30 |
| 3 PLC | ±- |
| 4 PLC | ±- |
| ANGLES | ±2° |

MATERIAL -
FINISH -

DWN RICHARD CHEN 19AUG2011
CHK HAPYE WU 19AUG2011
APVD ERIC KONG 19AUG2011
PRODUCT SPEC 108-106071
APPLICATION SPEC 114-106071
WEIGHT -

TE Connectivity

NAME 2P HOUSING MULTI 6P CONNECTOR -

| SIZE | CAGE CODE | DRAWING NO | RESTRICTED TO |
|---|---|---|---|
| A3 | 00779 | C-1983660 | - |

CUSTOMER DRAWING | SCALE N/A | SHEET 1 OF 1 | REV A1

1470-19 (3/11)