RoHS compliant

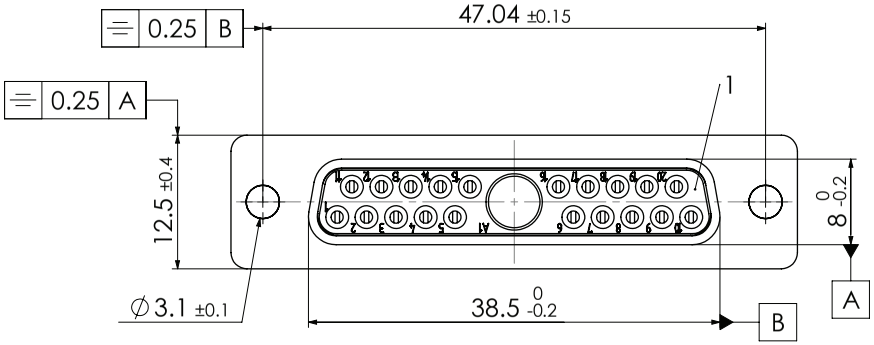

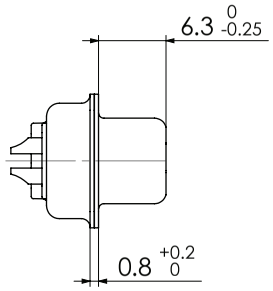

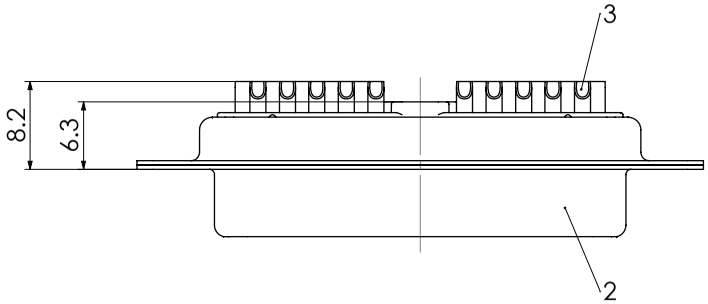

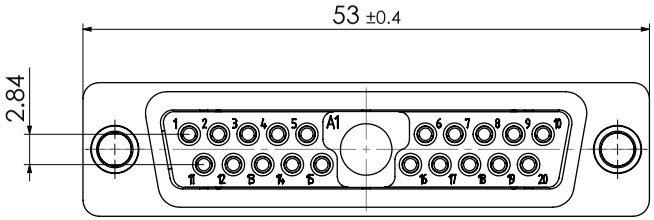

No.	St.	Part	Type Description/Material	Surface plating/Colour/Class
3	20	Signal contact	S0 / Brass	AuroPur / AWG 20
2	1	Shell	Steel	tin plated
1	1	Insulator	PBT (-55°C - +130°C)	green

Measurement without tolerance acc. to ISO 2768-m

SCALE 2:1

TITLE D-Sub Mixed-Layout Connector

	NAME / DATE
DRAWN	Markus.Jobst 03-03-2011
CHECKED	Birgit.Rinder 03-03-2011

FCT a molex company

DWG.NO. FM21W1SA-K121

REV. 1

REV.	DATE	CH.-NO.
1		

ORIGINAL: DIN A3-DRAWING AS A FILE

REPLACEMENT FOR:

PAGES 1

COMMENT:
ALL RIGHTS ARE RESERVED BY US FOR THIS DRAWING, WITHOUT OUR PRIOR CONSENT,
IT MAY NEITHER BE DUBLICATED NOR MADE AVAILABLE TO A THIRD PARTY,
AND IT ALSO MAY NOT BE IMPROPERLY USED BY TE RECEIVER, OR A THIRD PARTY.