THIS DRAWING IS UNPUBLISHED. RELEASED FOR PUBLICATION -,- .
© COPYRIGHT - By - ALL RIGHTS RESERVED.

LOC	DIST
F1	25

REVISIONS

P	LTR	DESCRIPTION	DATE	DWN	APVD
	G2	REVISED PER ECO-13-004228	08JUN13	KH	DR

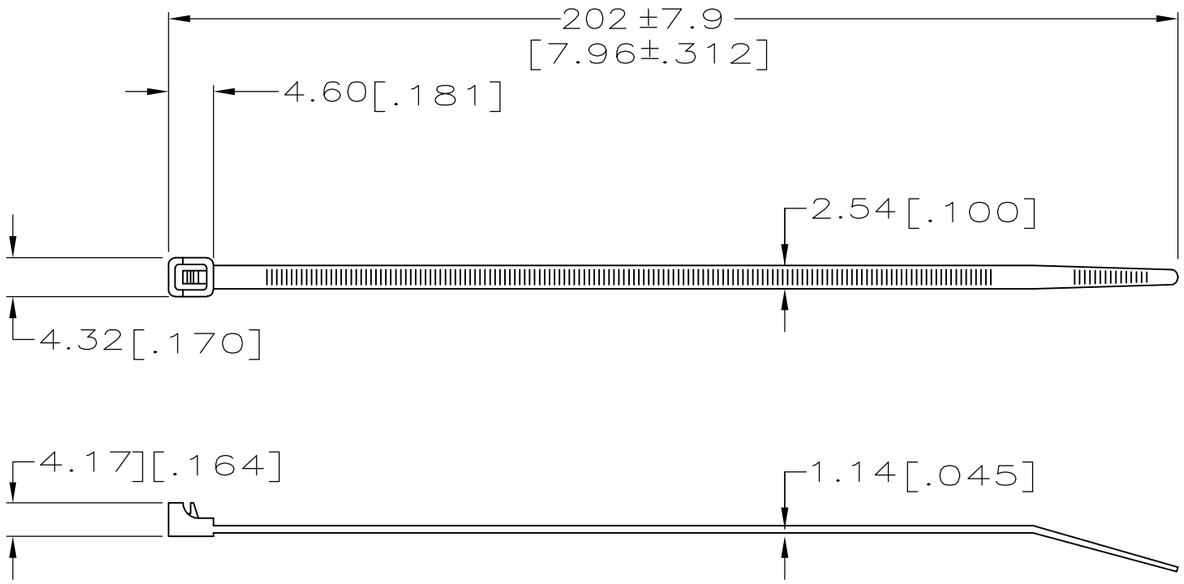

1. PACKAGED IN A HEAT SEALED 3 MIL POLYBAG WITH LABEL PER DWG 404707.
2. MAXIMUM BUNDLE DIAMETER: 50.8 [2.0].
3. MINIMUM TENSILE STRENGTH: 8.165 KG [18 LBS].
4. MIL NO. MS3367-4
5. MOSITURIZED 1 TO 2.5% WATER

	QUANTITY/BAG	REF	COLOR	PART NUMBER
OBSOLETE	1000	TY2MB	BLACK	2-608687-0
	1000	TY2M	NATURAL	2-608687-9
	100	TY2CB	BLACK	1-608687-0
	100	TY2C	NATURAL	1-608687-9

THIS DRAWING IS A CONTROLLED DOCUMENT.

DIMENSIONS: mm [INCHES]

TOLERANCES UNLESS OTHERWISE SPECIFIED:

0 PLC	± -
1 PLC	± -
2 PLC	± -
3 PLC	± 0.99[.039]
4 PLC	± -
ANGLES	± -

MATERIAL: NYLON 6/6

FINISH: -

DWN JR RUTH 12MAR10
CHK T MICHIELUTTI 12MAR10
APVD T MICHIELUTTI 12MAR10
PRODUCT SPEC —
APPLICATION SPEC —
WEIGHT —

TE Connectivity

NAME: CABLE TIE, RELEASABLE, 8 INCHES —

SIZE	CAGE CODE	DRAWING NO	RESTRICTED TO
A3	00779	C-608687	—

CUSTOMER DRAWING | SCALE NONE | SHEET 1 OF 1 | REV G2