THIS DRAWING IS UNPUBLISHED. RELEASED FOR PUBLICATION -,N/A .
© COPYRIGHT N/A BY TYCO ELECTRONICS CORPORATION. ALL INTERNATIONAL RIGHTS RESERVED.

LOC	DIST
DF	DO

REVISIONS

P	LTR	DESCRIPTION	DATE	DWN	APVD
	R	REVISED PER ECO-09-012539	03-04-09	CT	RL

1. THIS RECEPTACLE WILL MATE WITH ANY 11C1, SIZE 2 PLUG IN AMPLIMITE SERIES.
2. MAXIMUM WIRE INSULATION TO BE USED WITH THIS RECEPTACLE IS ø.068.
3. THIS CONNECTOR ACCEPTS (1) POWER 8, OR COAX SOCKET CONTACT IN POSITION A1, PURCHASED SEPARATELY.
4. THIS CONNECTOR ACCEPTS SIZE 20 SOCKET CONTACTS IN POSITIONS 1 THRU 10, PURCHASED SEPARATELY.

5. UL/CSA DESIGNATION STAMPED IN THIS AREA, OPTIONAL.
6. STEEL PER ASTM-A-109.
7. BRASS PER MIL-C-50 AND ASTM-B-36 UNS NO. C26000.
8. CADMIUM PLATED PER QQ-P-416.
9. GOLD PLATED PER MIL-G-45204 TYPE II, GRADE C, CLASS 1 OVER COPPER PER MIL-C-14550, CLASS IV.
10. FINISH: TIN PER ASTM-B-545 .000200 MIN THK OVER COPPER PER AMS2418 .000100-.000200 THK.
11. FINISH: BRIGHT TIN PER ASTM-B-545 .000400-.000550 THK OVER COPPER PER AMS2418 .000050 MIN THK.
12. FINISH: TIN PER ASTM-B-545 .000200 MIN THK OVER COPPER PER AMS2418 .000100-.000200 THK.
13. FINISH: ZINC PLATE PER ASTM-B-633 .000200-.000400 THK WITH SUPPLEMENTARY CHROMATE (Cr3+).

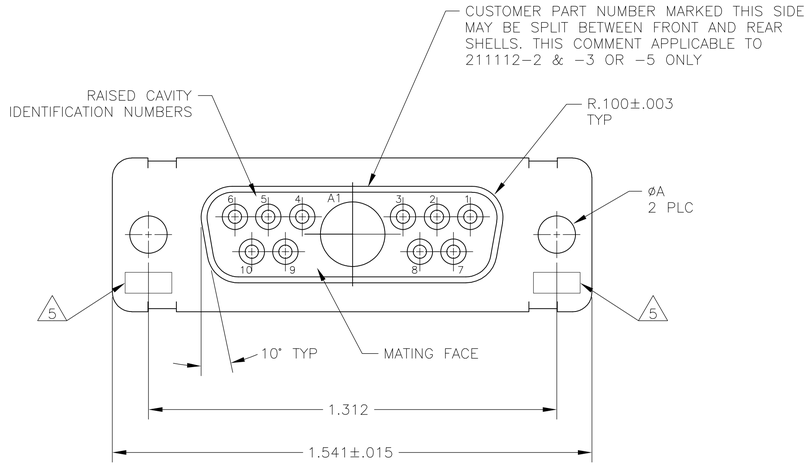

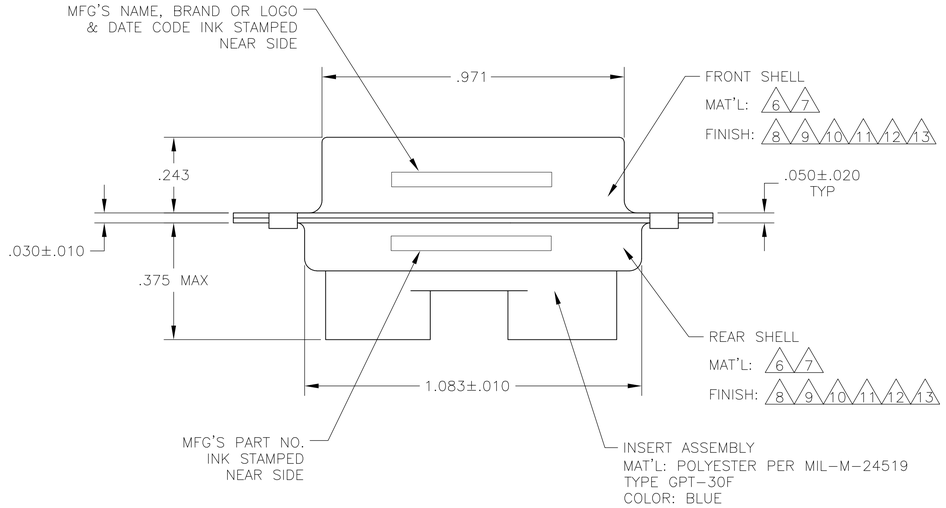

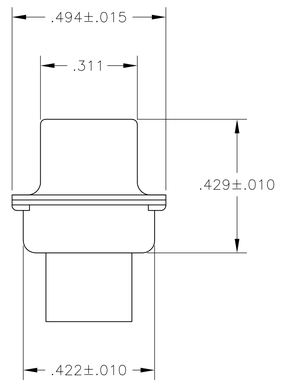

REMARKS	øA	GSFC P/N	PART NO.
6 12	.120	–	5-211112-4
6 13	.120	–	5-211112-1
6 11	.120	–	211112-6
7 9	.120	B010942-0038	211112-5
6 10	.120	–	211112-4
7 9	.154	311P405-9S-B-15	211112-3
7 9	.120	311P405-9S-B-12	211112-2
6 8	.120	–	211112-1

THIS DRAWING IS A CONTROLLED DOCUMENT.

DIMENSIONS: INCHES

TOLERANCES UNLESS OTHERWISE SPECIFIED:
0 PLC ± –
1 PLC ± –
2 PLC ± –
3 PLC ± .005[0.13]
4 PLC ± –
ANGLES ± 0°30'

MATERIAL –
FINISH –

DWN T. SHUEY 01NOV88
CHK A.EMADI 21JAN88
APVD A.EMADI 21JAN88
PRODUCT SPEC –
APPLICATION SPEC –
WEIGHT –

Tyco Electronics
Tyco Electronics Corporation
Harrisburg, PA 17105-3608

NAME
RECEPTACLE ASSEMBLY
AMPLIMITE 11C1
SERIES 109, SIZE 2, COAX MIX

SIZE	CAGE CODE	DRAWING NO	RESTRICTED TO
A1	00779	C-211112	–

CUSTOMER DRAWING
SCALE 4:1 SHEET 1 OF 1 REV R

4805 (1/08)