PATLITE

■ WE, WEP / 37.5mm Profile

The WE / WEP Series are Ultra-Slim Signal Lights that offer seamless integration with equipment.

SIZE:	37.5mm profile
INPUT VOLTAGE OPTIONS:	AC/DC24V
FUNCTIONS AVAILABLE:	- Continuous only - Continuous, Flashing, Alarms
MOUNTING OPTIONS:	Wall mount only: includes 4 mounting screws
BODY STYLE:	Pre-assembled, pre-wired, not interchangeable or stackable after purchase
TIERS:	3, 4 or 5 stack versions available
MODULE COLORS:	Red / Amber / Green / Blue / Clear
ALARMS (FB STYLE ONLY):	- Alarm 1: selectable, single-tone, intermittent (fast beep) alarm, 90dB (at 1m) - Alarm 2: selectable, single tone, intermittent (slow beep) alarm, 90dB (at 1m)
RATINGS:	- CE - UL Component Recognition (US) - UL Component Recognition (Canada) - RoHS
PROTECTION:	- IP-65 (non-FB style) - IP-54 (FB style)
CONTROL OPTIONS:	- Dry contact closure such as switches or relay contacts - Open-collector transistor (NPN or PNP for DC24V, NPN for AC90-250V) - Direct voltage control for DC24V, continuous and alarm functions only

PART NUMBER GUIDE

W E P - 5 0 2 F B - R Y G B C

1. Series
WE, 37.5mm profile

2. Cover Color
None : Chrome
P : Beige

3. No. of Colors
3 to 5

4. Rated Voltage
02 : AC/DC24V

5 Options
Blank : Continuous only
FB : Continuous / Flashing / Alarms

6. LED Colors
R : Red
Y : Yellow
G : Green
B : Blue
C : Clear

指定外公差 General tolerance	角度公差 Angular tolerance ±[°] 短辺長さ Length of short side		~10	~50	~100	100~	寸法公差 Dimensional tolerance ±[mm]		~6	~30	~120	~300	~1000
	精	f	1	0.5	0.3	0.1	精	f	0.05	0.1	0.2	0.4	0.6
	中	m					中	m	0.1	0.3	0.5	0.7	1
	粗	v	3	1.5	1	0.5	粗	c	0.3	0.5	1	1.2	2

符号 Sym.	年月日 Date	訂正履歴 Revisions	記印 Sgn.	検印 Chk.	承認 App.
△-					
△-					
△-					
△-					

Dimensions

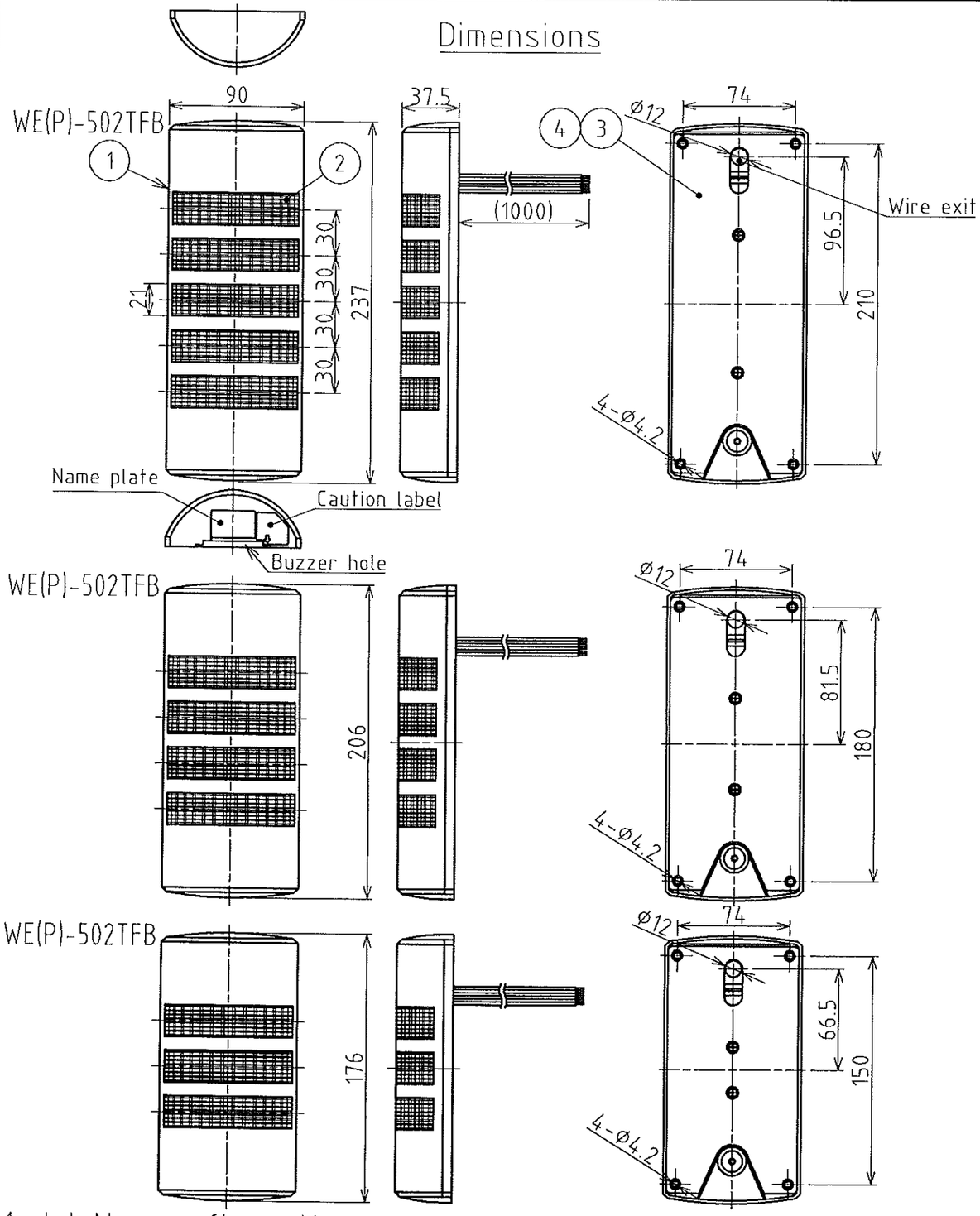

Wiring

Wire type: UL1007/AWG22

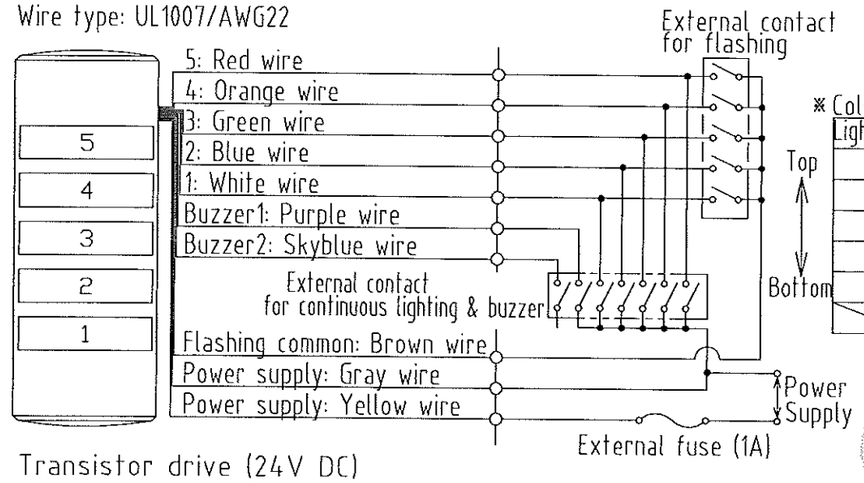

※Color of wires

Light No.	Wire color		
5	——	——	Red
4	——	Red	Orange
3	Red	Orange	Green
2	Orange	Green	Blue
1	Green	Blue	White
	3lights	4lights	5lights

Transistor drive (24V DC)

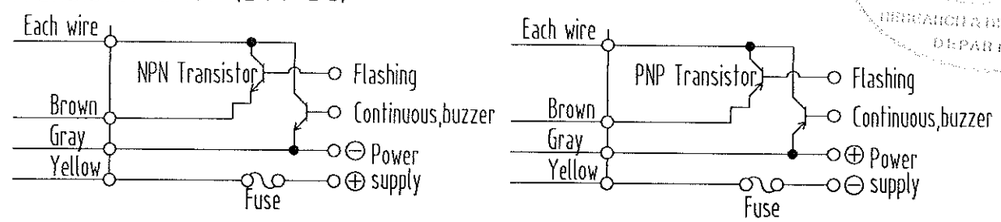

MAR. 10. 2008
RESEARCH & DEVELOPMENT DEPARTMENT

Note

1. Insulate ends of unused wires by tape or any other suitable thing.
2. Use "Class 2 circuit" for the power supply souce.
3. Concerning fuse and fuse-holder, use the products authorized by UL Inc.
4. Use the fuse conforming to the rated current of the machine on which the product is installed. is installed. (Example:Class J type fuse)
5. Two independent common lines are required for continuous lighting and flashing for a Programmable Controller and etc.
6. Do not contact flashing common and continuous lighting common with one LED unit simultaneously. Otherwise unexpected LED units may turn on. To avoid this, continuous lighting and flashing must be switched alternately.
7. Buzzer 1 takes precedence of buzzer 2 when they are in operation simultaneously.

番号 No.	部品名 Part Name	品目コード Part No.	数量 Qty.	材料 & 寸法 & 処理 Material & Size & Finish	記事 Remarks
4	Waterproof sheet	-	1	CR (Black)	
3	Body	-	1	ABS (Light gray)	
2	Lens	-	1	PC (Clear)	
1	Cover	-	1	ABS (Light gray) Chromium plating(WE only)	

Model No. configuration

WE□-□□□FB-□□□□□

- ■Body finish: P : No plating; None : Plating
- ■Light style: 3: 3 lights; 4: 4 lights; 5: 5 lights
- ■Rated voltage: 02: 24V AC/DC
- ■Light method: Continuous lighting or flashing and Buzzer
- ■LED unit color: (R:Red/Y:Amber/G:Green/B:Blue/C:White)

※Arranged in top-to-bottom order.

設計 Dgn.by	製図 Drn.by	検図 Chk.by	承認 App.by	図名 Name	機種名 Model	特注No. S.P.No.
A.Ikeda 13.Dec.'99	Y.Nagayama 5.Mar.'08		6 Mar.'08	Specifications / Dimensions	WE(P)-□02FB	—
					品目コード Part No.	—
三角法 3rd Angle P.	単位 Unit mm	尺度 Scale —	株式会社パトライト PATLITE Corporation		図番 Drawing No.	WE-502FB-A18A-2/2

指定外公差 General Tolerance	角度公差 Angular tolerance ±[°]					寸法公差 Dimensional tolerance ±[mm]							符号 Sym.	年月日 Date	訂正履歴 Revisions	記印 Sgn.	検印 Chk.	承認 App.
	短辺長さ Length of short side	~10	~50	~100	100~			~6	~30	~120	~300	~1000	△-					
	精 f	1	0.5	0.3	0.1	精	f	0.05	0.1	0.2	0.4	0.6	△-					
	中 m	1	0.5	0.3	0.1	中	m	0.1	0.3	0.5	0.7	1	△-					
	粗 v	3	1.5	1	0.5	粗	c	0.3	0.5	1	1.2	2	△-					

Dimensions

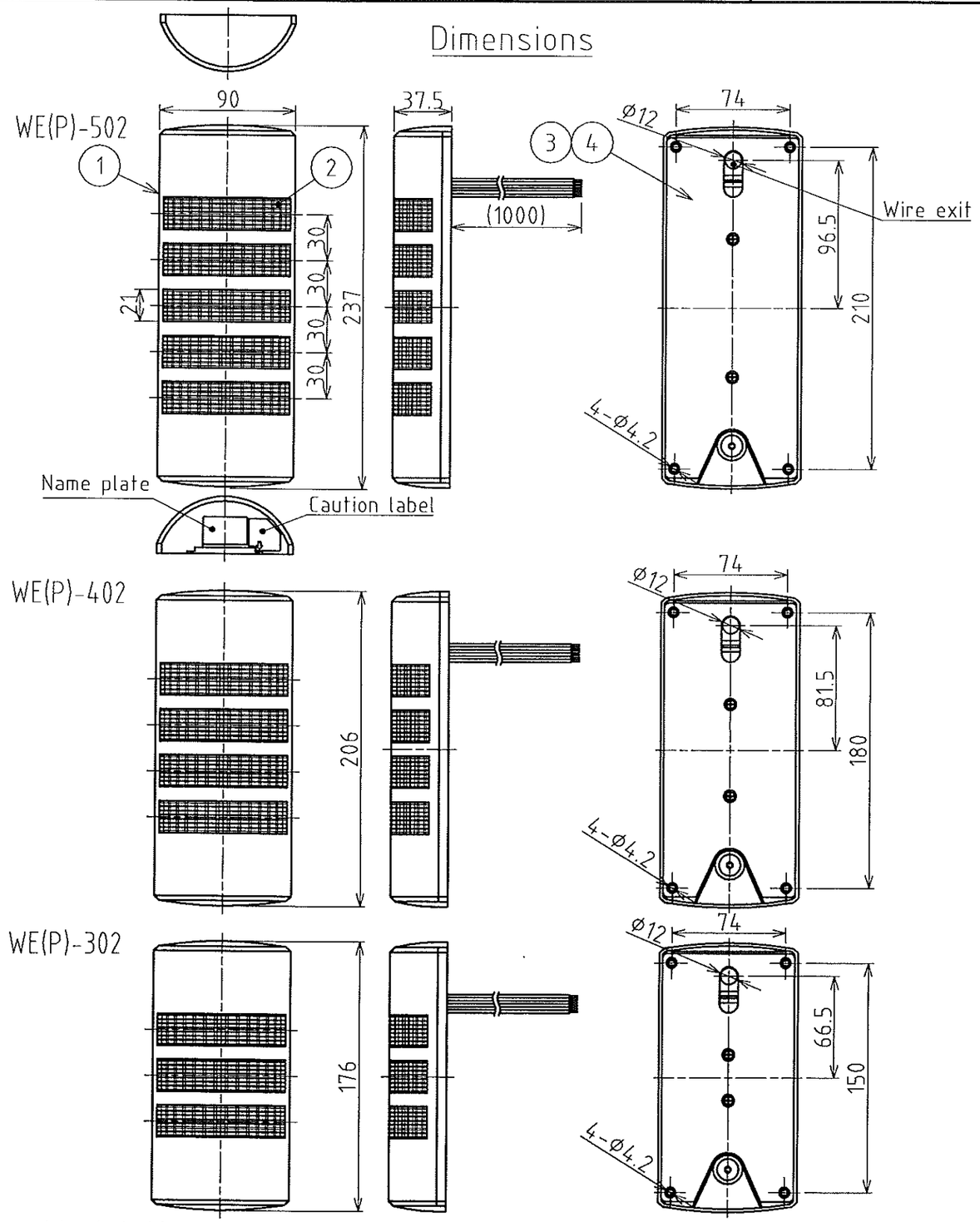

Wiring

Wire type: UL1007/AWG22

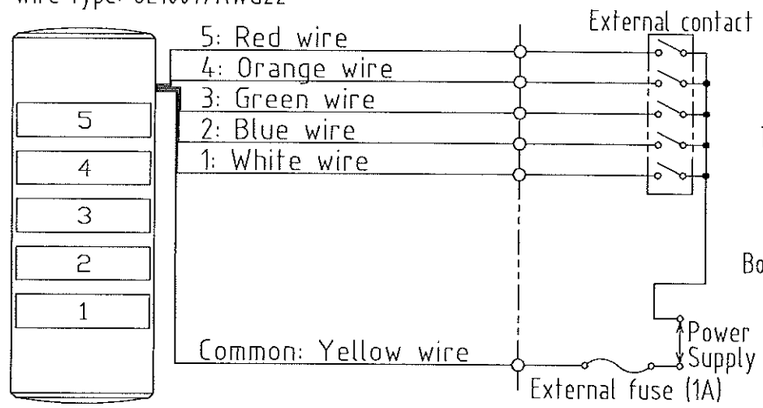

※ Color of wires

Light No.	Wire color		
5	——	——	Red
4	——	Red	Orange
3	Red	Orange	Green
2	Orange	Green	Blue
1	Green	Blue	White
	3lights	4lights	5lights

Top ↑ ↓ Bottom

Transistor drive (24V DC)

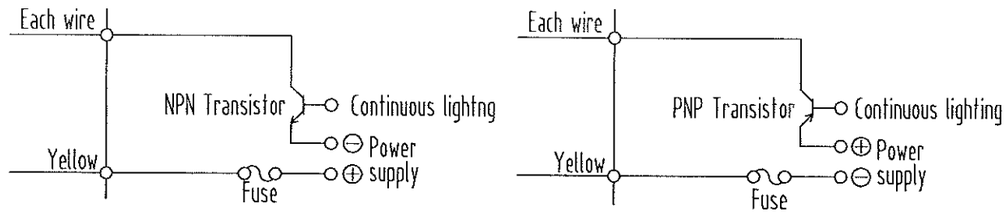

Note

1. Insulate ends of unused wires by tape or any other suitable thing.
2. Use "Class 2 circuit" for power supply souce.
3. Concerning fuse and fuse-holder, use the products authorized by UL Inc.
4. Use the fuse conforming to the rated current of the machine on which the product is installed. (Example: Class J type fuse)

PATLITE CORPORATION
MAR 10. 2008
RESEARCH & DEVELOPMENT DEPARTMENT

番号 No.	部品名 Part Name	品目コード Part No.	数量 Qty.	材料 & 寸法 & 処理 Material & Size & Finish	記事 Remarks
4	Waterproof sheet	-	1	CR (Black)	
3	Body	-	1	ABS (Light gray)	
2	Lens	-	1	PC (Clear)	
1	Cover	-	1	ABS (Light gray) Chromium plating(WE only)	

Model No. configuration

WE□-□□□-□□□□□

- Body finish: P : No plating; None : Plating
- Light style: 3: 3 lights; 4: 4 lights; 5: 5 lights
- Rated voltage: 02: 24V AC/DC
- LED unit color: (R:Red/Y:Amber/G:Green/B:Blue/C:White)

※ Arranged in top-to-bottom order.

設計 Dgn.by	製図 Drn.by	検図 Chk.by	承認 App.by	図名 Name	機種名 Model	特注No. S.P.No.
A.Ikeda 13.Dec.'99	Y.Nagayama 5.Mar.'08		6 Mar '08	Specifications / Dimensions	WE(P)-□02	——
三角法 3rd Angle P.	単位 Unit mm	尺度 Scale –	株式会社 パトライト PATLITE Corporation		品目コード Part No. –	図番 Drawing No. WE-502-A18A-2/2

SPECIFICATIONS

Model	5 lights	WE−502			WEP−502	
	4 lights	WE−402			WEP−402	
	3 lights	WE−302			WEP−302	
Surface of cover		Chromium plating			Not plating (Light gray)	
Rated voltage		24V AC/DC (50/60Hz)				
Operating voltage		Rated voltage±10%				
Current consumption		Per light				
		Red	Amber	Green	Blue	White
	Typ.	24 mA		17 mA		
	Max.	28 mA	27 mA	23 mA		
Operating temperature range (Relative humidity)		- 30℃ ～ + 60℃ (Less than 90%)				
Mounting place		Indoor only				
Mounting direction		Upright,Updown,Sideways				
Protection rating		IP65				
Vibration proof		19.6 m/s² (30Hz)				
Insulation resistance		To be measured by an insulation measuring device of 500VDC between the terminals and the chassis. More than 1MΩ				
Withstand voltage		500VAC being applied between the terminals and the chassis for 1 minute. Not braking insulation				
Luminous intensity		Red	Amber	Green	Blue	White
		600 mcd or more	800 mcd or more	2000 mcd or more	600 mcd or more	1800 mcd or more
Mass		3 lights		4 lights		5 lights
		0.30 kg		0.33 kg		0.35 kg

No. WE−502−A18A−1／2

- This product confirms to the CE requirements and CE Marking is indicated.
- Recognized as UL standard. (Standard No.UL508, File No. E215660)
- This product complies with the RoHS Directive(DIRECTIVE 2002/95/EC)

MAR 10 2008
RESEARCH & DEVELOPMENT DEPARTMENT

PATLITE Corporation	App.by	Chk.by	Drn.by
	6 Mar '08		5.Mar.'08

SPECIFICATIONS

Model	5 lights	WE−502FB	WEP−502FB
	4 lights	WE−402FB	WEP−402FB
	3 lights	WE−302FB	WEP−302FB
Surface of cover		Chromium plating	Not plating (Light gray)
Rated voltage		24V AC/DC (50/60Hz)	
Operating voltage		Rated voltage±10%	

Current consumption		Per light					Buzzer
		Red	Amber	Green	Blue	White	
	Typ.	24 mA		17 mA			40 mA
	Max.	28 mA	27 mA	23 mA			50 mA (Rush current : 250mA)

Operating temperature range (Relative humidity)	- 30℃ ～ + 60℃ (Less than 90%)
Mounting place	Indoor only
Mounting direction	Upright,Updown,Sideways
Protection rating	IP54 (Mounting direction : Upright)
Vibration proof	19.6 m/s² (30Hz)
Insulation resistance	To be measured by an insulation measuring device of 500VDC between the terminals and the chassis. More than 1MΩ
Withstand voltage	500VAC being applied between the terminals and the chassis for 1 minute. Not braking insulation
Flashing cycle	60±12 flashes per minute
Buzzer	Sound level: 90dB (at 1m)
	Tone: Buzzer1 : pipipi Buzzer2 : beep beep

Luminous intensity	Red	Amber	Green	Blue	White
	600 mcd or more	800 mcd or more	2000 mcd or more	600 mcd or more	1800 mcd or more

Mass	3 lights	4 lights	5 lights
	0.30 kg	0.33 kg	0.35 kg

No. WE−502FB−A18A−1／2

- This product confirms to the CE requirements and CE Marking is indicated.
- Recognized as UL standard. (Standard No.UL508, File No. E215660)
- This product complies with the RoHS Directive(DIRECTIVE 2002/95/EC)

MAR 10. 2008
RESEARCH & DEVELOPMENT DEPARTMENT

PATLITE Corporation	App.by	Chk.by	Drn.by
	6 Mar '08		5. Mar. 08