THIS DRAWING IS UNPUBLISHED. RELEASED FOR PUBLICATION – , – .
© COPYRIGHT – By – ALL RIGHTS RESERVED.

LOC	DIST
—	—

REVISIONS

P	LTR	DESCRIPTION	DATE	DWN	APVD
	C	VENDOR CHANGE; DIMENSION CHANGE ROLL BACK	21DEC2012	SP	RP

NOTES:

1 RANGE: Ø80 MAX.

2 MIN. TENSILE STRENGTH 130N.

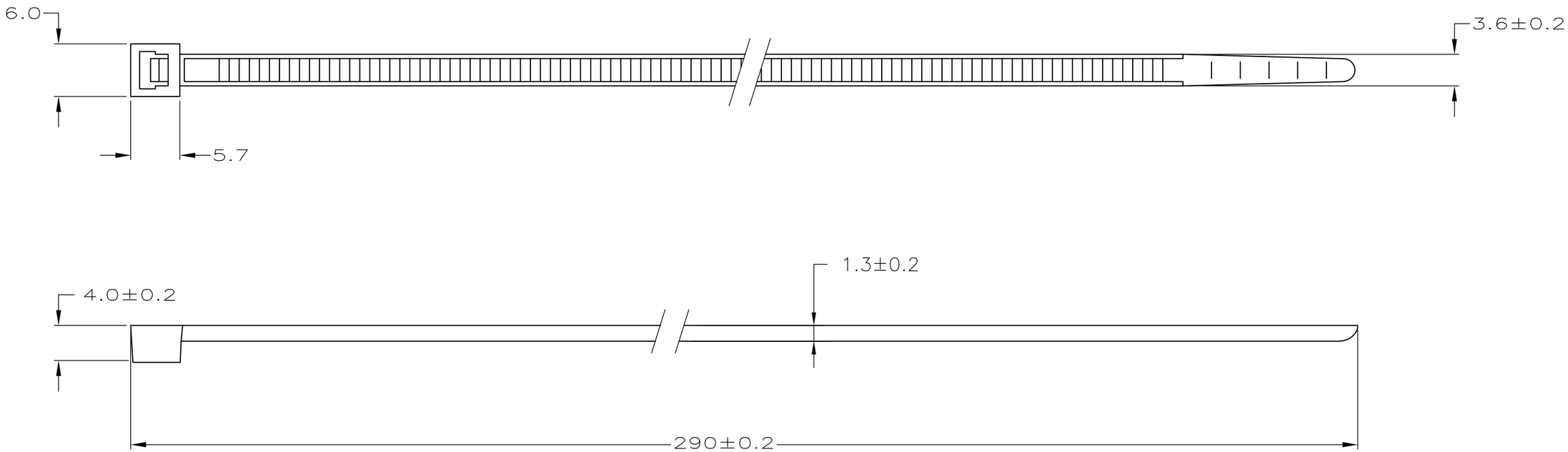

QTY	FINISH	MATERIAL	PARTNUMBER
500	BLACK	POLYAMIDE 6.6	3–160972–2
500	NATURAL	POLYAMIDE 6.6	3–160972–1
100	BLACK	POLYAMIDE 6.6	2–160972–2
100	NATURAL	POLYAMIDE 6.6	2–160972–1

THIS DRAWING IS A CONTROLLED DOCUMENT.

DIMENSIONS: mm

TOLERANCES UNLESS OTHERWISE SPECIFIED:

0 PLC	± –
1 PLC	± 0.4
2 PLC	± –
3 PLC	± –
4 PLC	± –
ANGLES	± –

MATERIAL: SEE TABLE

FINISH: SEE TABLE

DWN J.V.D.HEIJDEN. 27–02–92

CHK R.VOS. –

APVD L.V.SOEST. –

PRODUCT SPEC —

APPLICATION SPEC —

WEIGHT —

TE Connectivity

NAME: CABLE TY.

SIZE	CAGE CODE	DRAWING NO	RESTRICTED TO
A3	00779	C–160972	—

CUSTOMER DRAWING

SCALE	SHEET	REV
NTS	1 OF 1	C

1470–19 (3/11)