PART NO	DESCRIPTION
10132644-001LF	BUSBAR RA RECEPTACLE PRESS FIT OPTION

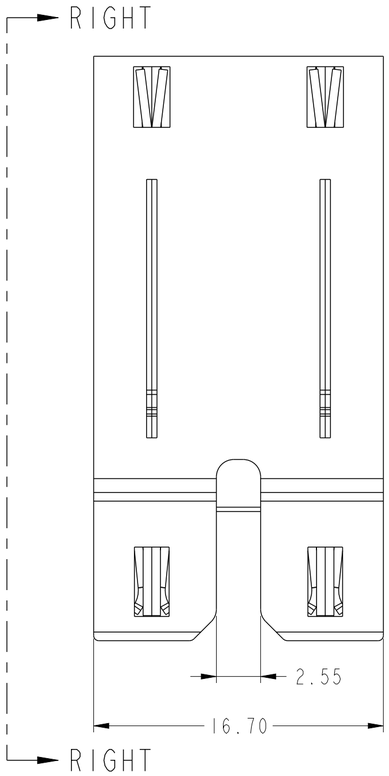

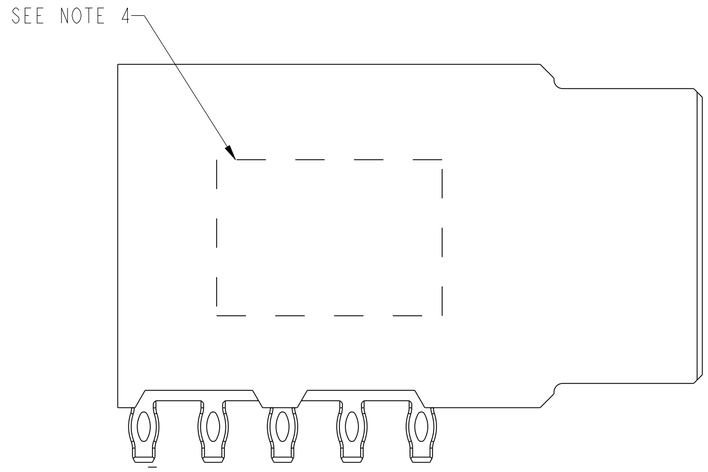

RIGHT-RIGHT
SCALE 4:1

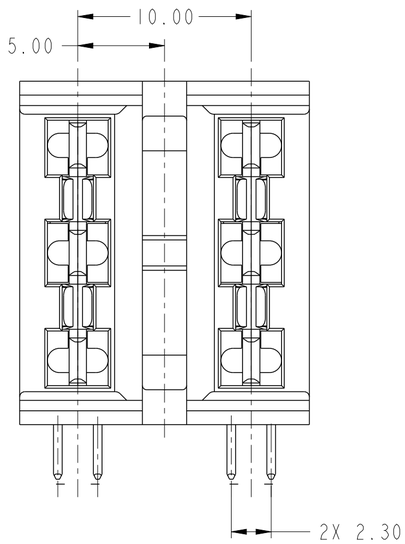

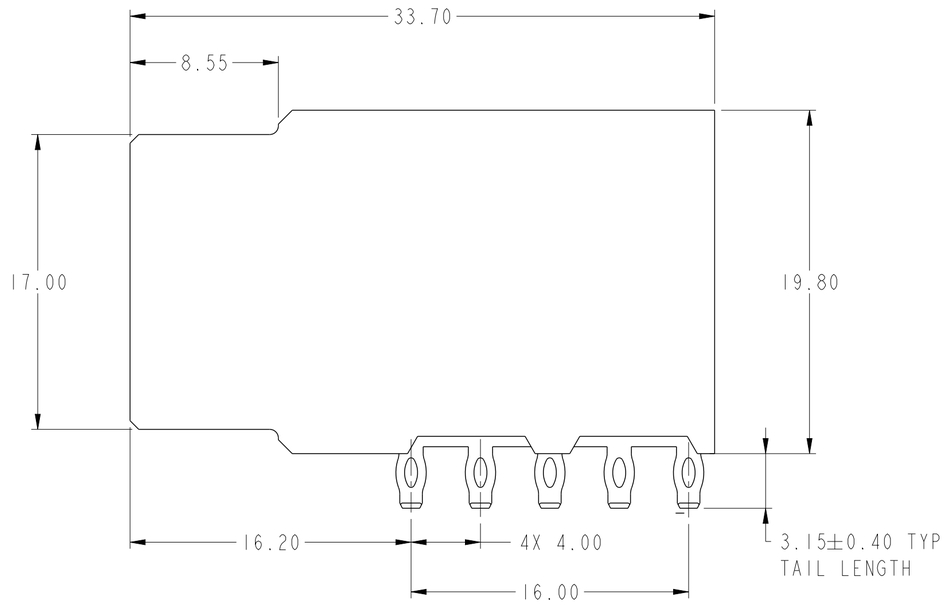

spec ref -			dr	Chris Gieski	2015/01/31	projection	mm	size A2 / scale 4:1
tolerance std: ISO 406, ISO 1101	TOLERANCES UNLESS OTHERWISE SPECIFIED		eng	Vicking Liu	2018/01/23			ecn no -
			chr	Feng Zheng	2018/01/23			
			appr	Pei-Ming Zheng	2018/01/23	product family --		rel level Released
surface ISO 1302	linear	0.X	±0.5	Amphenol FCi	title: RA ORTHO RECEPTACLE ASSEMBLY 2DC PWRMAX ORTHO CONNECTOR SYSTEM	dwg no 10132644		rev A
		0.XX	±0.25					
		0.XXX	±0.10					
	angular	0°	±2°		cat. no. -	Product - Customer Drw		sheet 1 of 6

© 2016 AFCI

Creo File - REV E - 2016-02-12

PART NO	DESCRIPTION
10132644-002LF	PCB RA RECEPTACLE PRESS FIT OPTION

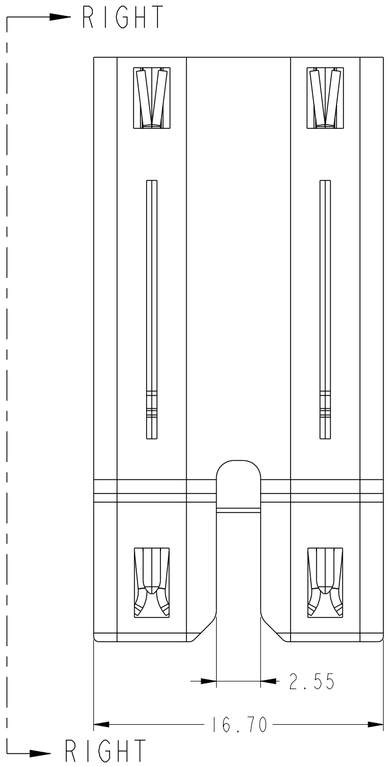

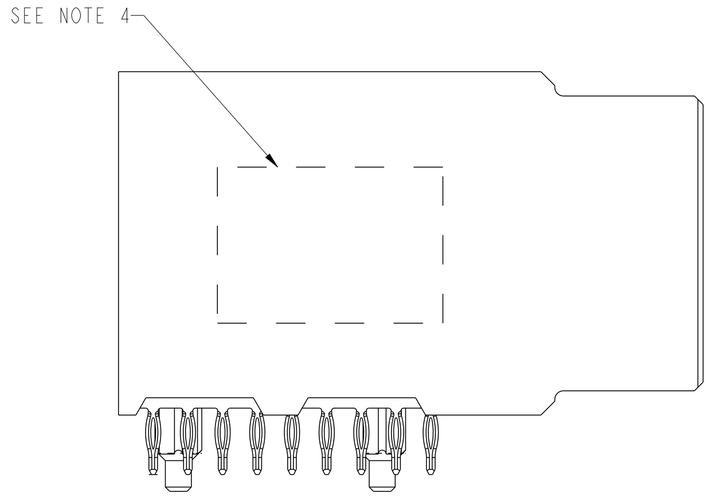

SECTION RIGHT-RIGHT
SCALE 4:1

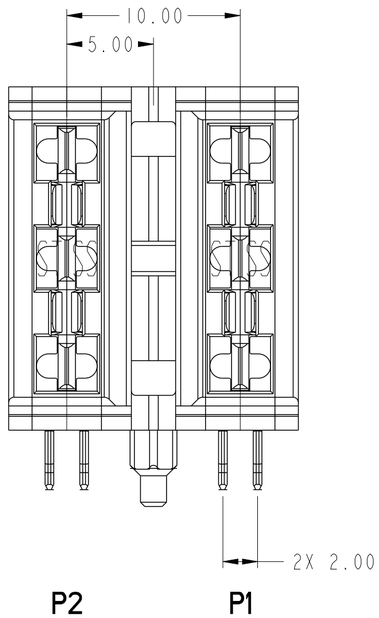

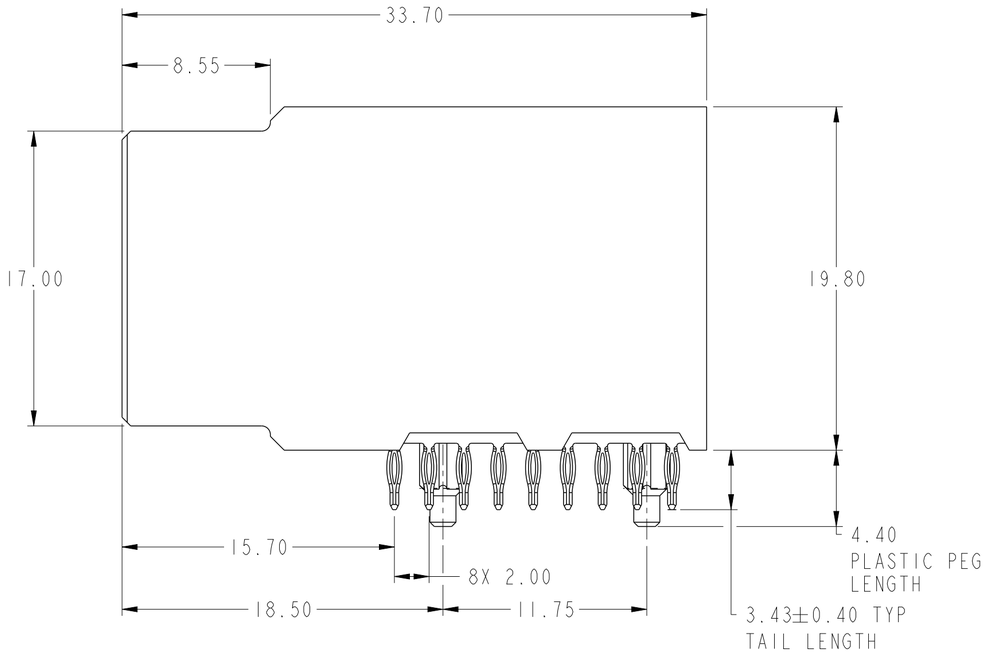

spec ref	-			dr	Chris Gieski	2015/01/31	projection	mm
tolerance std ISO 406 ISO 1101	TOLERANCES UNLESS OTHERWISE SPECIFIED			eng	Vicking Liu	2018/01/23		
				chr	Feng Zheng	2018/01/23		
				appr	Pei-Ming Zheng	2018/01/23	product family	--
surface	linear	0.X	±0.5	Amphenol FCi	title	RA ORTHO RECEPTACLE ASSEMBLY 2DC	dwg no	10132644
		0.XX	±0.25			PWRMAX ORTHO CONNECTOR SYSTEM		
		0.XXX	±0.10					
ISO 1302	angular	0°	±2°		cat. no.	-	Product - Customer Drw	

size	scale	rev
A2	1:1	A

ecn no -
rel level **Released**
sheet 2 of 6

© 2016 AFCI

Creo File - REV E - 2016-02-12

PART NO	DESCRIPTION
10132644-003LF	PCB RA RECEPTACLE STB OPTION

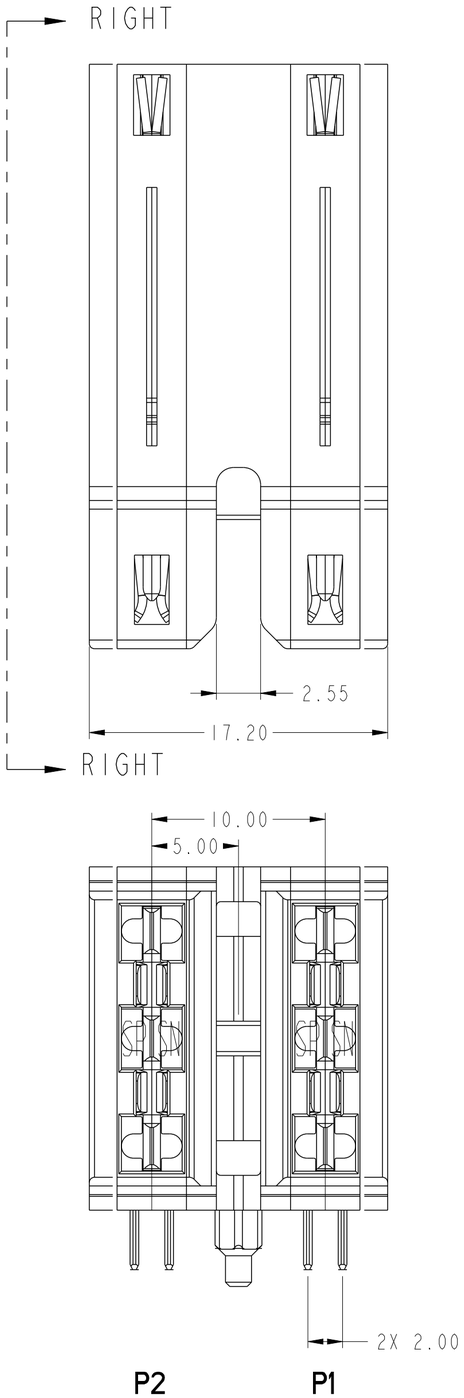

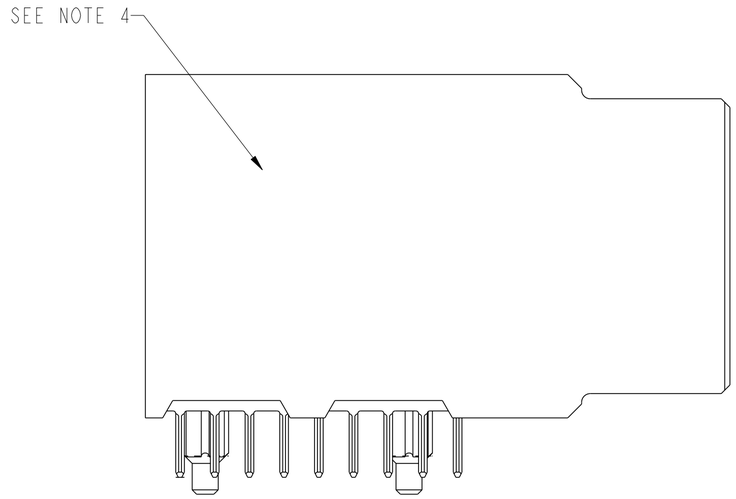

SECTION RIGHT-RIGHT
SCALE 4:1

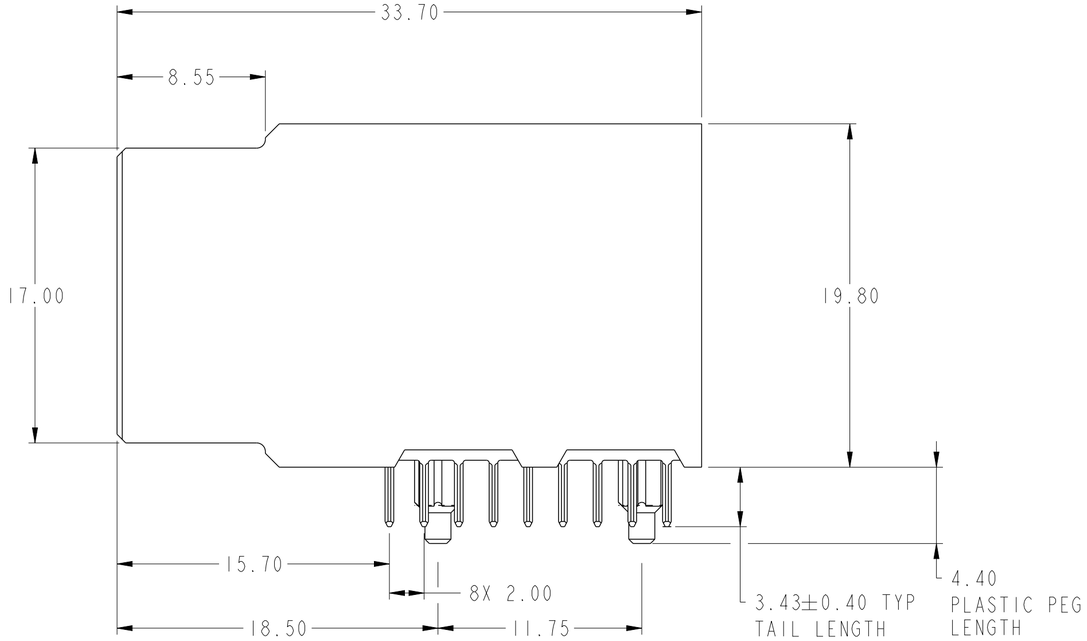

spec ref -			dr	Chris Gieski	2015/01/31	projection	mm	size A2 / scale 1:1
tolerance std: ISO 406, ISO 1101	TOLERANCES UNLESS OTHERWISE SPECIFIED		eng	Vicking Liu	2018/01/23			ecn no -
			chr	Feng Zheng	2018/01/23			
			appr	Pei-Ming Zheng	2018/01/23	product family --		rel level Released
surface ISO 1302	linear	0.X	±0.5	Amphenol FCi	title: RA ORTHO RECEPTACLE ASSEMBLY 2DC PWRMAX ORTHO CONNECTOR SYSTEM	dwg no 10132644		rev A
		0.XX	±0.25					
		0.XXX	±0.10					
	angular	0°	±2°		cat. no. -	Product - Customer Drw		sheet 3 of 6

© 2016 AFCI

Creo File - REV E - 2016-02-12

TOP LAYER DESCRIPTION	TABLE 1 (PWRMAX) PLATED THROUGH-HOLE REQUIREMENTS							
	DRILLED HOLE DIAMETER	COPPER THICKNESS	TIN-LEAD THICKNESS	NICKEL THICKNESS	GOLD THICKNESS	TIN THICKNESS	SILVER THICKNESS	FINISHED HOLE DIAMETER
IMMERSION TIN	1.68-1.73 (1.72 DRILL)	0.025 - 0.050	--	--	--	0.9 - 1.5um	--	1.500 - 1.650
IMMERSION SILVER	1.68-1.73 (1.72 DRILL)	0.025 - 0.050	--	--	--	--	0.15 - 0.65um	1.500 - 1.650
COPPER (SEE NOTE 8)	1.68-1.73 (1.72 DRILL)	0.025 - 0.050	--	--	--	--	--	1.500 - 1.650
GOLD	1.68-1.73 (1.72 DRILL)	0.025 - 0.050	--	0.003 - 0.007	FLASH UP TO 0.0002	--	--	1.500 - 1.650

TABLE 2 (PWRMAX OTHOGONAL PLUG) BUSBAR HOLE REQUIREMENTS	
DESCRIPTION	FINISHED HOLE DIAMETER
BUSBAR	1.600 ± 0.050

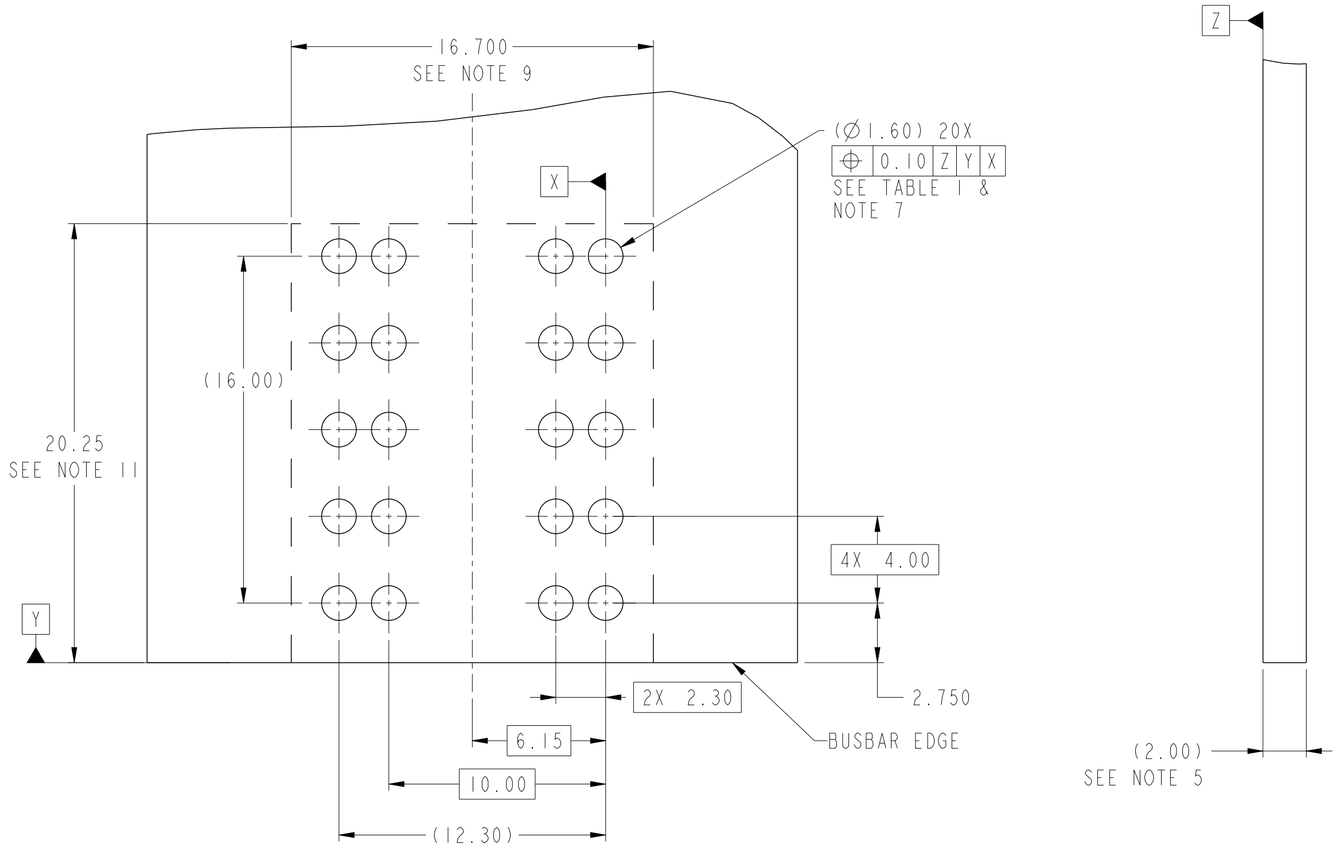

RECOMMENDED BUSBAR FOOTPRINT
SCALE 5:1

spec ref -			dr	Chris Gieski	2015/01/31	projection	mm	size A2 / scale 2:1
tolerance std: ISO 406, ISO 1101	TOLERANCES UNLESS OTHERWISE SPECIFIED		eng	Vicking Liu	2018/01/23			
			chr	Feng Zheng	2018/01/23			ecn no -
			appr	Pei-Ming Zheng	2018/01/23	product family -		rel level **Released**
surface -	linear	0.X	±0.5	Amphenol FCi	title: RA ORTHO RECEPTACLE ASSEMBLY 2DC PWRMAX ORTHO CONNECTOR SYSTEM	dwg no 10132644		rev A
		0.XX	±0.25					
		0.XXX	±0.10					
ISO 1302	angular	0°	±2°		cat. no. -	Product - Customer Drw		sheet 4 of 6

© 2016 AFCI

Creo File - REV E - 2016-02-12

TOP LAYER DESCRIPTION	TABLE 3 (PWRMAX) PLATED THROUGH-HOLE & BUSBAR HOLE REQUIREMENTS						
	DRILLED HOLE DIAMETER	COPPER THICKNESS	NICKEL THICKNESS	GOLD THICKNESS	TIN THICKNESS	SILVER THICKNESS	FINISHED HOLE DIAMETER
IMMERSION TIN	0.81-0.86 (0.85 DRILL)	0.025 - 0.050	--	--	0.9 - 1.5um	--	0.70-0.80
IMMERSION SILVER	0.81-0.86 (0.85 DRILL)	0.025 - 0.050	--	--	--	0.15 - 0.65um	0.70-0.80
COPPER (SEE NOTE 8)	0.81-0.86 (0.85 DRILL)	0.025 - 0.050	--	--	--	--	0.70-0.80
GOLD	0.81-0.86 (0.85 DRILL)	0.025 - 0.050	0.003 - 0.007	FLASH UP TO 0.0002	--	--	0.69-0.80

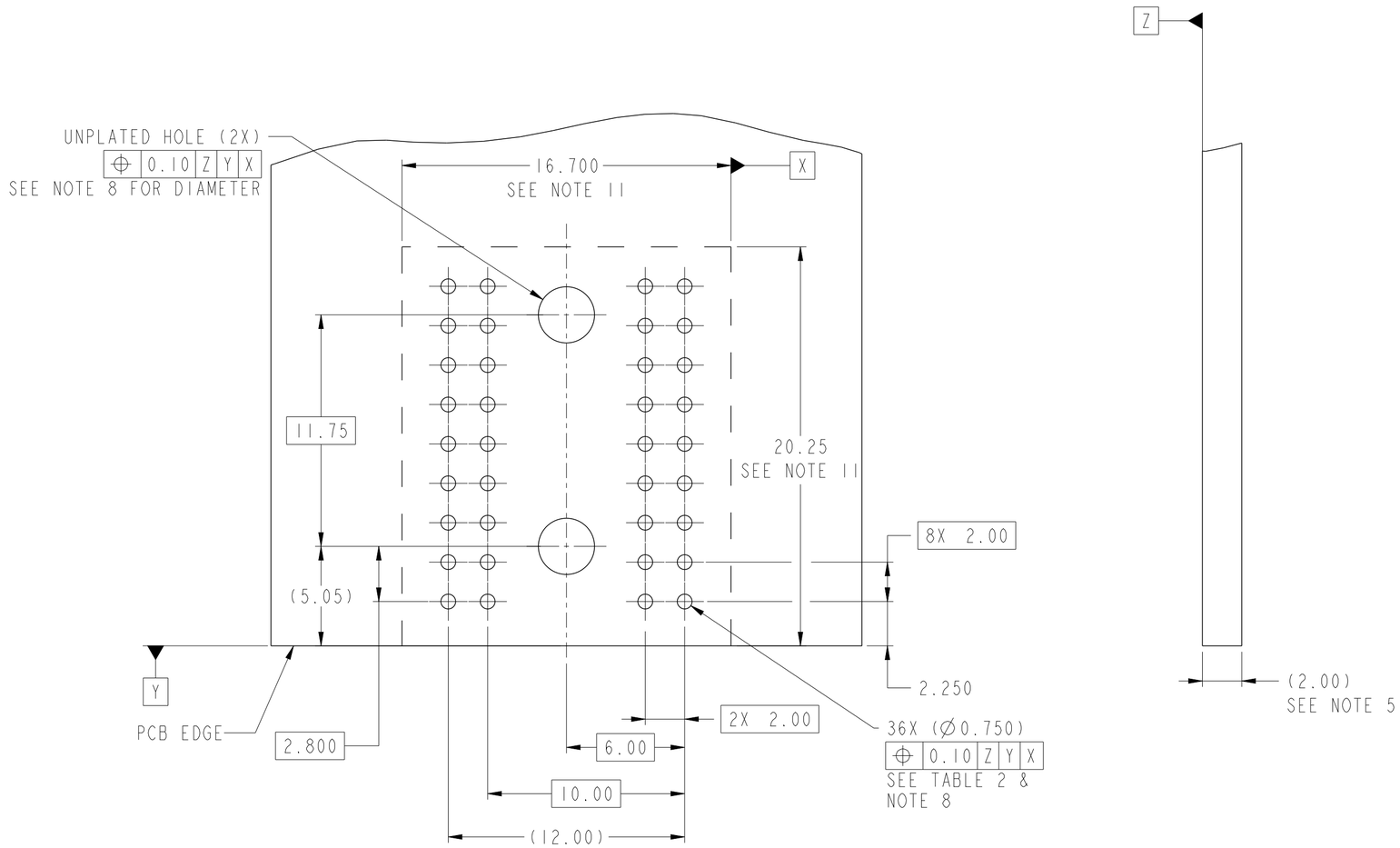

PCB PRESS FIT & STB LAYOUT
SCALE 5:1

spec ref -			dr	Chris Gieski	2015/01/31	projection	mm
tolerance std ISO 406 ISO 1101	TOLERANCES UNLESS OTHERWISE SPECIFIED		eng	Vicking Liu	2018/01/23		
			chr	Feng Zheng	2018/01/23		
			appr	Pei-Ming Zheng	2018/01/23	product family -	
surface - ISO 1302	linear	0.X ±0.5	Amphenol FCi	title	RA ORTHO RECEPTACLE ASSEMBLY 2DC	dwg no	10132644
		0.XX ±0.25			PWRMAX ORTHO CONNECTOR SYSTEM		
		0.XXX ±0.10					
	angular	0° ±2°		cat. no. -	Product - Customer Drw		

size	scale	rev
A2	2:1	A

ecn no -
rel level **Released**
sheet 5 of 6

© 2016 AFCI

Creo File - REV E - 2016-02-12

RA ORTHO RECEPTACLE ASSEMBLY 2DC			
PRODUCT NUMBER	PLATING TYPE	TOOLED	DESCRIPTION
10132644-001LF	GCS	NO	BUSBAR RA RECEPTACLE PRESS FIT OPTION
10132644-002LF	GCS	YES	PCB RA RECEPTACLE PRESS FIT OPTION
10132644-003LF	GCS	YES	PCB RA RECEPTACLE STB OPTION

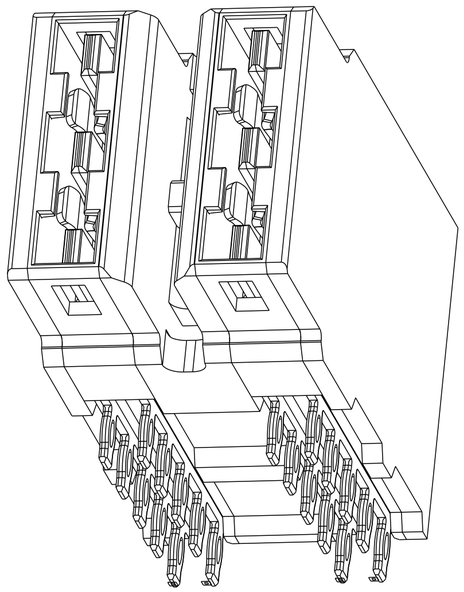

10132644-001
SCALE 4:1

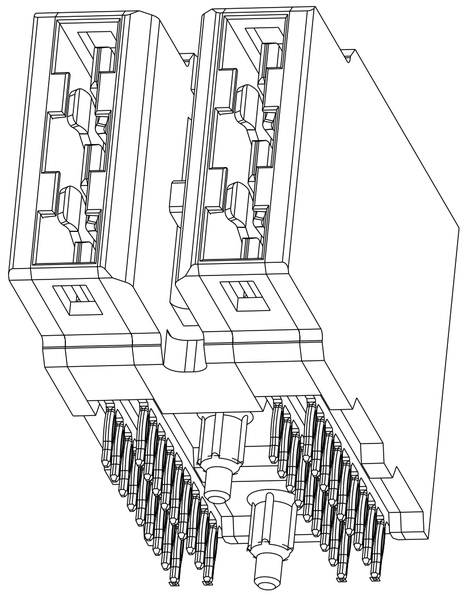

10132644-002
SCALE 4:1

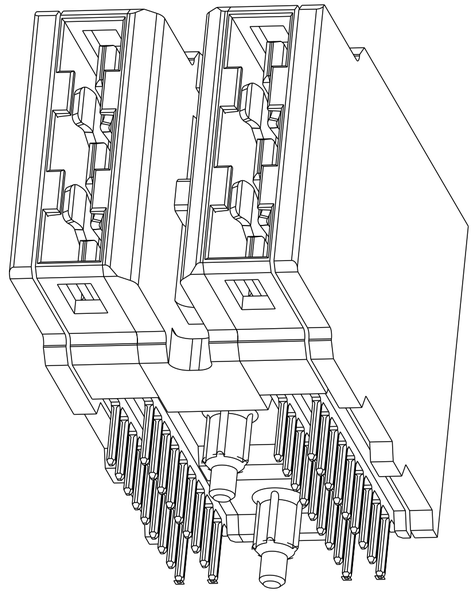

10132644-003
SCALE 4:1

NOTES:

1. CONNECTOR MATERIALS:
   HOUSING: HIGH TEMP THERMOPLASTIC, BLACK
   UL94 V-0 COMPLIANT
   CONTACTS: COPPER ALLOY

2. CONTACT FINISH: (REF. GS-12-1342 SECTION 5.2).

3. PRODUCT SPECIFICATION: GS-12-1342.
   APPLICATION SPECIFICATION: GS-20-0452.
   PACKAGING SPECIFICATION: GS-14-2479

4. PRODUCT MARKING (MANUFACTURER'S NAME, PRODUCT NUMBER AND DATE CODE) ON HOUSING IN AREA SHOWN.

5. MINIMAL NOMINAL BUSBAR & PCB THICKNESS: 1.60 mm

6. COPPER PLATING THICKNESS IN CENTER OF VIA-HOLE CAN BE
   NO MORE THAN 0.003 LESS THAN OTHER AREAS.

7. ALL HOLE SIZES ARE FINISHED HOLE SIZES UNLESS OTHERWISE NOTED.

8. PLASTIC PEG MOUNTING HOLES ARE UNPLATED.
   Ø 2.85 ± 0.10 FOR PRESS-FIT TAILS
   Ø 2.55 ± 0.10 FOR SOLDER TAILS

9. CONNOCTER KEEP OUT ZONE.

spec ref	-		dr	Chris Gieski	2015/01/31	projection	mm
tolerance std ISO 406 ISO 1101	TOLERANCES UNLESS OTHERWISE SPECIFIED		eng	Vicking Liu	2018/01/23		
			chr	Feng Zheng	2018/01/23		
			appr	Pei-Ming Zheng	2018/01/23	product family	--
surface ISO 1302	linear	0.X ±0.5	Amphenol FCi	title	RA ORTHO RECEPTACLE ASSEMBLY 2DC	dwg no	10132644
		0.XX ±0.25			PWRMAX ORTHO CONNECTOR SYSTEM		
		0.XXX ±0.10					
	angular	0° ±2°		cat. no.	-	Product - Customer Drw	

size	scale	rev	
A2	4:1	A	
ecn no	-		
rel level	Released		
sheet 6 of 6			

© 2016 AFCI