3M™ I/O INTERCONNECT SYSTEM 2.0mm FOR IEEE 1394 3E106 SERIES
STRAIGHT (VERTICAL) THROUGH-HOLE PLUG MALE

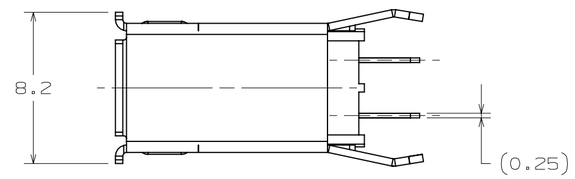

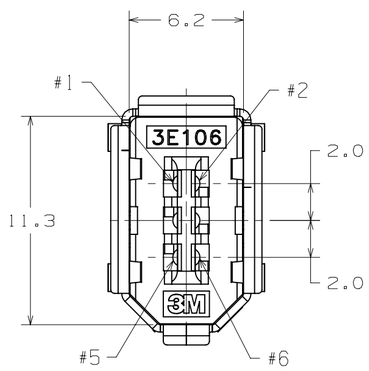

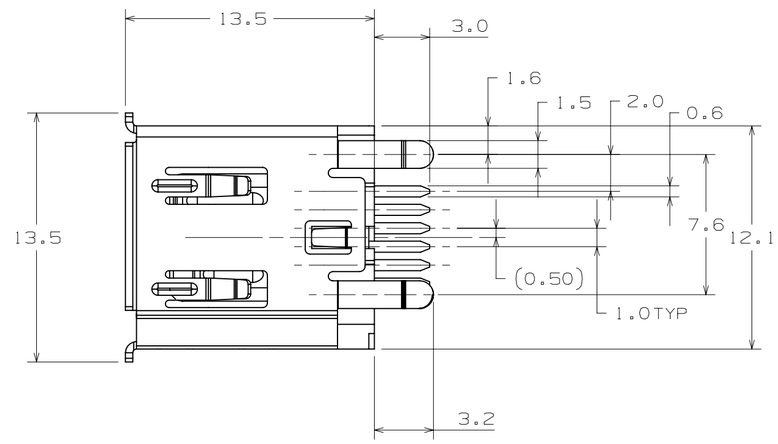

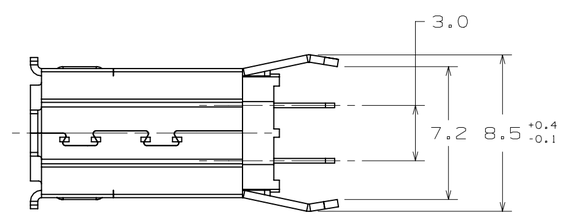

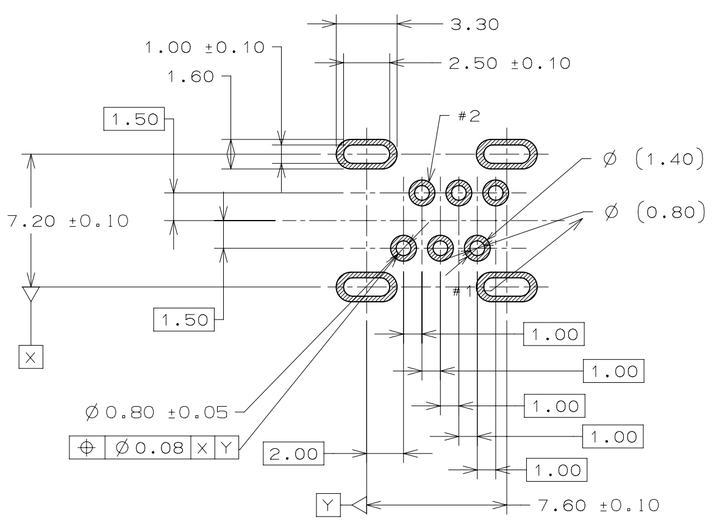

P.C.BOARD HOLE PATTERN
(COMPONENT SIDE)
PCB THICKNESS = 1.6mm

Notes:

Physical:
- Insulation:
  - Material: Glass Reinforced Polyester (PBT)
  - Flammability: UL 94V-0
- Color: Black

Contact:
- Material: Copper Alloy
- Plating:
  - Underplating: Nickel
  - Wiping Area: GOLD 0.76um MIN.
  - Termination Area: GOLD FLASH

Shroud:
- Material: Copper Alloy
- Underplating: Nickel
- Plating: Tin

Electrical:
- Current Rating: 1 A
- Voltage Rating: 150 VAC / 200 VDC
- Insulation Resistance: >5 x $10^8\Omega$ at 500 VDC
- Withstanding Voltage: 500 VRMS for 1 minute

Environmental:
- Temperature Rating: -55° C to +85° C

Ordering Information: 3E106-1230 KV

REV	ECO	ISSUE DATE AND DESCRIPTION	DRFT	CHKD
A		FEB 23,2011		

DESIGN REFERENCE NEXT ASSEMBLY

DISTRIBUTION CODES

DRFT M. LAMBERT DATE FEB 23,2011 MFG DATE

CHKD D. CRONCH DATE FEB 23,2011 APPVL DATE

DIVISION DIVISION CODE

DO NOT SCALE DRAWING

SCALE 1/1

TOLERANCES EXCEPT AS NOTED

INCHES
.0 ±
.00 ±
.000 ±
.0000 ±

THIRD ANGLE PROJECTION

INTERPRET PER ASME Y14.5 - 1994

MILLIMETERS
0 ±
.0 ± .3
.00 ± .13
.000 ±

MAX SURFACE ROUGHNESS 125
☐ ALL SURFACES
☒ MARKED ONLY

ANGLES ±1°

3M Center St. Paul, MN 55144

© 3M COPYRIGHT 2011
This document and the information it contains are 3M property and may not be reproduced or further distributed without 3M permission, or used or disclosed other than for 3M authorized purposes. All rights reserved.

TITLE
STRAIGHT (VERTICAL) THROUGH HOLE PLUG (MALE) FOR IEEE 1394

CAGE NUMBER | SIZE C | DRAWING NO. 78-5100-2397-7 | REV. A

MODEL 3E106-1230 KV | DET. LISTS ☐ YES ☒ NO | SHT 1 OF 1

REVISION A

DRAWING NUMBER 78-5100-2397-7