DESIGNED FOR USE WITH RG-214/U, RG-225/U & RG-393/U	
CABLE ENTRY DIAMETER MINIMUM	
CONTACT	.095
COLLAR	.291
WASHER	.447
WEDGE	.457
CLAMP NUT	.437

REVISIONS

REV	DESCRIPTION	DATE	APPROVED
01_0	RELEASED	17SEP79	PR
02_0	SEE ECN 81-0929-1	SB 3-30-81	RD
03_0	92-0010 AND 92-0110-2 (2 OF 2)	AD 04-15-92	BB 5/13/92

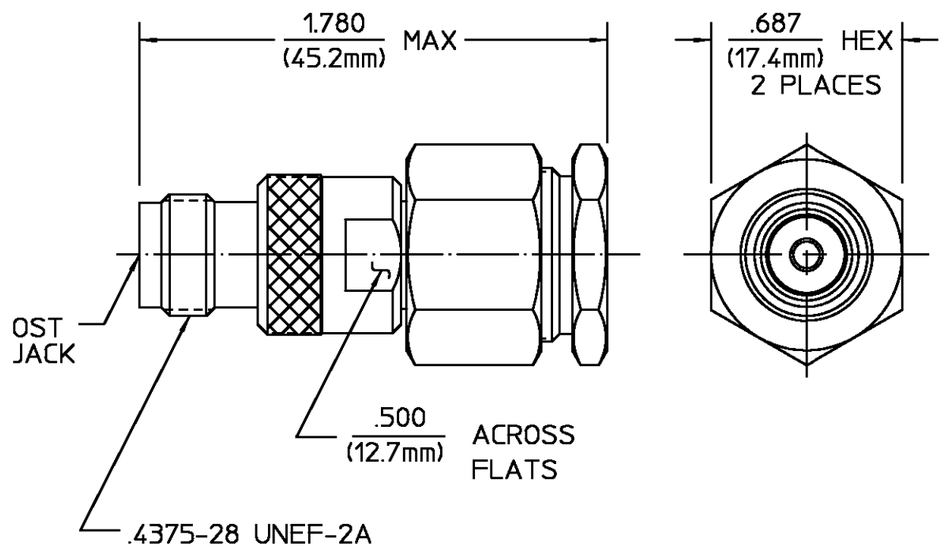

ELECTRICAL	MECHANICAL	ENVIRONMENTAL
Nominal Impedance (Ohms) 50	Interface Dimensions MIL-STD-348A, Fig. N/A	Temperature Rating -65°C to +165°C
Frequency Range (GHz) DC to 15	Recommended Mating Torque 12 -15 in-lbs	Vibration MIL-STD-202, Method 204, Condition B
Volt Rating (VRMS MAX) @ Sea Level 500	Mating Characteristics: Insertion (MAX Lbs) 2.0	Shock MIL-STD-202, Method 213, Condition I
VSWR 1.10 +.01 f(GHz)	Withdrawal(MIN Oz) 2.0	Thermal Shock MIL-STD-202, Method 107, Condition B,
Insertion Loss (dB MAX) .07 $\sqrt{f(GHz)}$	Force to Engage and Disengage (In-Lbs MAX) 2.0	Moisture Resistance MIL-STD-202, Method 106
RF Leakage (dB MIN) -[90-(fGHz)	Center Contact Captivation Axial (Lbs) 6.0	Corrosion - MIL-STD-202, Method 101, Condition B, 5% salt spray
Corona, 70,000 Ft (VRMS MIN) 375	Radial (In-Oz) N/A	
Dielectric Withstanding Voltage (VRMS MIN) @ Sea Level 1,500	Cable Retention Axial Force (Lbs) 40.0	
Contact Resistance (Milliohms MAX) Center Contact 3.0	Torque (In-Oz) N/A	
Outer Contact 2.0	Weight (Grams) TBD	
Cable to Housing .5		
RF High Potential @ Sea Level (VRMS MIN @ 5 MHz) 1,000		
I.R.(Megohms MIN) 10,000		

COMPONENT	MATERIAL	FINISH
HOUSING CLAMP NUT	BRASS PER QQ-B-626 COMP. 360, HALF HARD	NICKEL PLATE PER QQ-N-290 OVER COPPER STRIKE
DIELECTRIC	TFE FLUOROCARBON PER ASTM-D-1457	N/A
CENTER CONTACT	BERYLLIUM COPPER PER ASTM B 196, ALLOY C17300, CONDITION H	GOLD PLATE PER MIL-G-45204 OVER COPPER PLATE PER MIL-C-14550
COLLAR WASHER WEDGE	BRASS PER QQ-B-626 COMP. 360, HALF HARD	GOLD PLATE PER MIL-G45204 OVER COPPER PLATE PER MIL-C-14550

UNLESS OTHERWISE SPECIFIED DIMENSIONS ARE IN INCHES
TOLERANCE ON
FRAC. ± 1/64 DEC. ±.005 ANGLES ± 1°

DRAWN BY RR	DATE 9-11-79	
CHECKED BY R.D.SMITH	9-13-79	
APP'D BY GH	9-21-79	

AMP

AMP Incorporated
140 Fourth Avenue
Waltham, MA 02451-7599

These drawings and specifications are the property of AMP Incorporated and shall not be reproduced or copied or used in whole or in part as the basis for the manufacture or sale of item(s) without written permission.

USE ASS'Y PROCEDURE

NO. A.P. 408-04717 (31-063)

TITLE OST STRAIGHT CABLE JACK CLAMP ATTACHMENT

SIZE	CODE IDENT NO.		REV
B	26805	3102-7214-10	03_0
SCALE 2 : 1			SHEET 1 OF 1

CUSTOMER DRAWING

AMP PART # 1080552-1
SHEET 1 OF 1 REV A