THIS DRAWING IS UNPUBLISHED. RELEASED FOR PUBLICATION - ,- .
© COPYRIGHT - By - ALL RIGHTS RESERVED.

LOC	DIST
CM	00

REVISIONS

P	LTR	DESCRIPTION	DATE	DWN	APVD
	H2	REVISED PER ECR-15-006687	21OCT2015	NK	NL

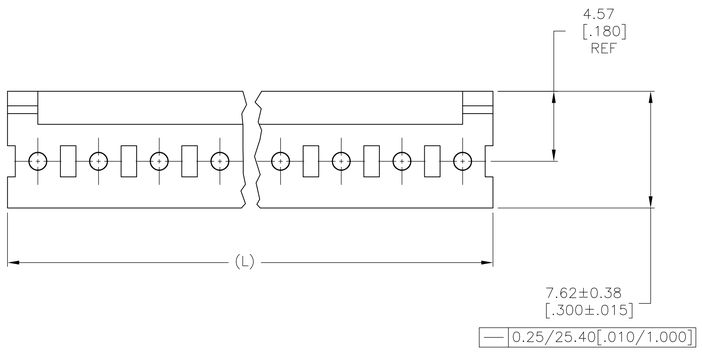

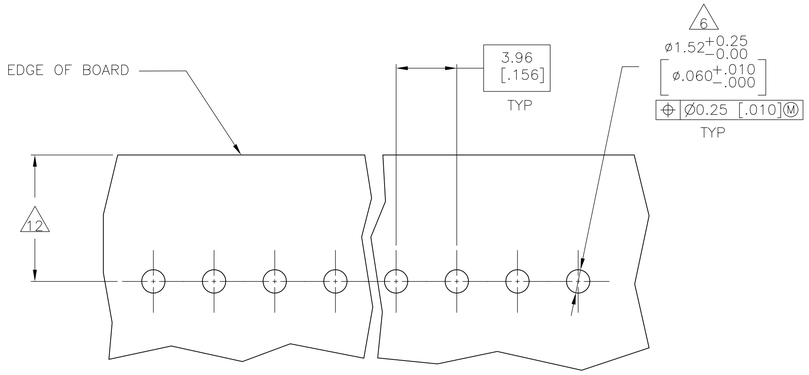

2 RECOMMENDED MOUNTING HOLE PATTERN FOR .109±0.016 THICK P.C. BOARD (H1)

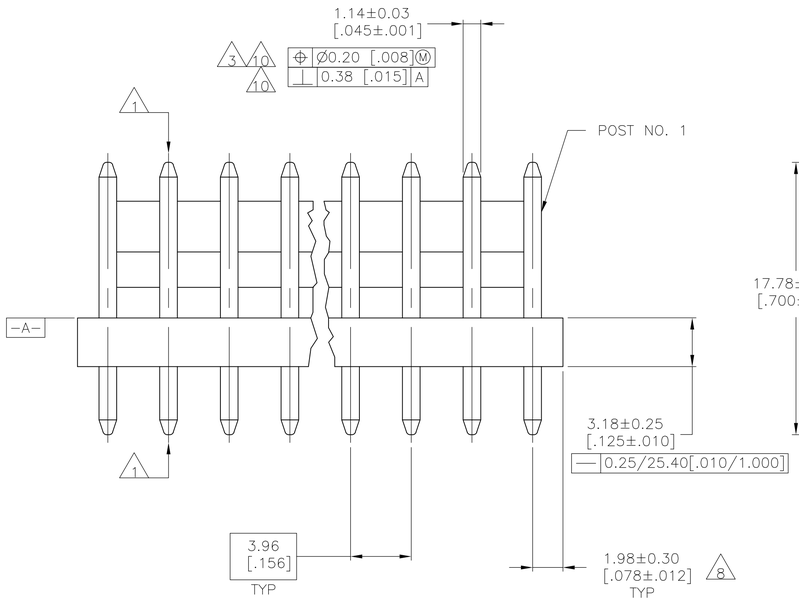

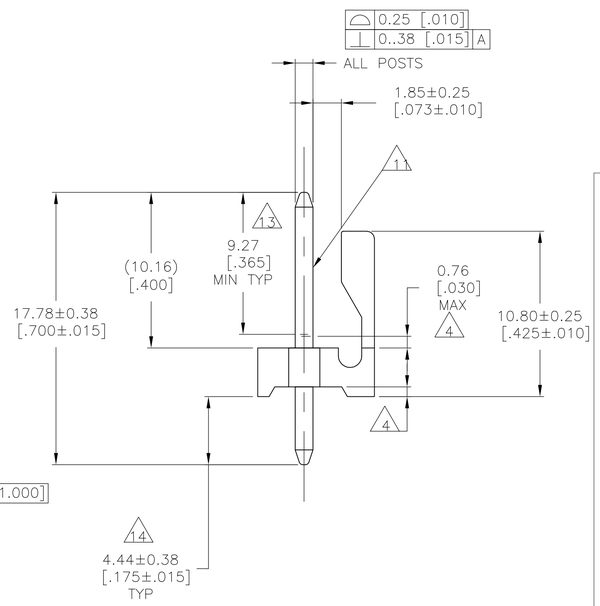

1 POST TO WITHSTAND 13 NEWTONS (3 LBS) MINIMUM AXIAL FORCE IN BOTH DIRECTIONS SHOWN WITHOUT DISLODGING.

2 TOLERANCES APPLY TO SOLDER SIDE OF BOARD.

3 MEASURED AT SURFACE −A−

4 PLASTIC FLASH PERMITTED IN THIS AREA.

5 PARTS COMPLY WITH AMP SOLDERABILITY SPEC. NO. 109-11-2.

6 ONE HOLE MAY BE UNDERSIZED 1.30/1.17 [.051/.046] DIA. FOR ASSEMBLY RETENTION DURING WAVE SOLDERING.

7 MATERIAL: HEADER-THERMOPLASTIC POLYESTER GLASS-FILLED 94V-0 (NATURAL)
POST-COPPER ALLOY (SEE NOTES 13 & 14 FOR PLATING)

8 COORDINATE DIMENSION APPLIES FROM CENTER OF ACTUAL FEATURE.

9 PLASTIC BURRS CAUSED BY CUT-OFF TOOLING ARE PERMITTED WITHIN THE MAXIMUM TOLERANCE ENVELOPE.

10 POST TO BE MEASURED WHEN STRIP IS HELD FLAT.

11 POST MUST WITHSTAND TWO 90° BENDS AGAINST EXTRUSION WITHOUT BREAKING.

12 DIMENSION SHOULD BE 4.45 [.175] MIN WHEN MATING WITH A MTA-156 CONNECTOR ASSEMBLY OR A SL-156 CONNECTOR ASSEMBLY.

13 PLATING:GOLD PLATE AREA, 0.00076 [.000030] GOLD OR 0.00008 [.000003] MIN GOLD FLASH OVER 0.00068 [.000027] PALLADIUM NICKEL,PER TE CONNECTIVITY'S DISCRETION, ALL SIDES, OVER NICKEL UNDERPLATE, 0.00127 [.000050] MIN, ALL SIDES AND ENTIRE LENGTH OF POST.

14 PLATING: BRIGHT TIN/LEAD (93/7) PLATE AREA, 0.00381-0.00889 [.000150-.000350] THICK, ALL FOUR SIDES 4.45 [.175] MINIMUM FOR -2 THRU -24. MATTE TIN PLATE AREA 0.00381-0.00889 [.000150-.000350] THICK ALL FOUR SIDES, 4.45 [.175] FOR -32 THRU -54.

15 OBSOLETE PARTS: OBSOLETE CIS STREAMLINING PER D.RENAUD/D.SINISI

16 OBSOLETE PART NUMBER

LEAD FREE

DIM (L)	NO.OF POSN	ASSEMBLY
95.10 [3.744]	24	5-644760-4
91.14 [3.588]	23	5-644760-3
87.17 [3.432]	22	5-644760-2
83.21 [3.276]	21	5-644760-1
79.25 [3.120]	20	5-644760-0
75.29 [2.964]	19	4-644760-9
71.32 [2.808]	18	4-644760-8
67.36 [2.652]	17	4-644760-7
63.40 [2.496]	16	4-644760-6
59.44 [2.340]	15	4-644760-5
55.47 [2.184]	14	4-644760-4
51.51 [2.028]	13	4-644760-3
47.55 [1.872]	12	4-644760-2
43.59 [1.716]	11	4-644760-1
39.62 [1.560]	10	4-644760-0
35.66 [1.404]	9	3-644760-9
31.70 [1.248]	8	3-644760-8
27.74 [1.092]	7	3-644760-7
23.77 [.936]	6	3-644760-6
19.81 [.780]	5	3-644760-5
15.85 [.624]	4	3-644760-4
11.89 [.468]	3	3-644760-3
7.92 [.312]	2	3-644760-2

SUPERCEDED 15

SUPERCEDED 16 15 16 15 16

CONTAINS LEAD

DIM (L)	NO.OF POSN	ASSEMBLY
95.10 [3.744]	24	~~2-644760-4~~
91.14 [3.588]	23	~~2-644760-3~~
87.17 [3.432]	22	~~2-644760-2~~
83.21 [3.276]	21	~~2-644760-1~~
79.25 [3.120]	20	~~2-644760-0~~
75.29 [2.964]	19	~~1-644760-9~~
71.32 [2.808]	18	~~1-644760-8~~
67.36 [2.652]	17	~~1-644760-7~~
63.40 [2.496]	16	~~1-644760-6~~
59.44 [2.340]	15	~~1-644760-5~~
55.47 [2.184]	14	~~1-644760-4~~
51.51 [2.028]	13	~~1-644760-3~~
47.55 [1.872]	12	~~1-644760-2~~
43.59 [1.716]	11	~~1-644760-1~~
39.62 [1.560]	10	~~1-644760-0~~
35.66 [1.404]	9	~~644760-9~~
31.70 [1.248]	8	~~644760-8~~
27.74 [1.092]	7	~~644760-7~~
23.77 [.936]	6	~~644760-6~~
19.81 [.780]	5	~~644760-5~~
15.85 [.624]	4	~~644760-4~~
11.89 [.468]	3	~~644760-3~~
7.92 [.312]	2	~~644760-2~~

THIS DRAWING IS A CONTROLLED DOCUMENT.

DIMENSIONS: mm [INCHES]

TOLERANCES UNLESS OTHERWISE SPECIFIED:
0 PLC ± -
1 PLC ± -
2 PLC ± 0.13 [.005]
3 PLC ± -
4 PLC ± -
ANGLES ± -

MATERIAL 7 FINISH 7

DWN	S. HOOVER	07NOV02
CHK	D. BOSSI	07NOV02
APVD	D. BOSSI	07NOV02

TE Connectivity

NAME: MTA-.156 HEADER ASSEMBLY, FRICTION LOCK, STRAIGHT, .045 ROUND POST, .000030 GOLD, SPECIAL

PRODUCT SPEC —
APPLICATION SPEC —
WEIGHT —

SIZE	CAGE CODE	DRAWING NO	RESTRICTED TO
A1	00779	C-644760	—

CUSTOMER DRAWING | SCALE 5:1 | SHEET 1 OF 1 | REV H2

4805 (3/11)