THIS DRAWING IS UNPUBLISHED. RELEASED FOR PUBLICATION -.-- .
© COPYRIGHT - BY TYCO ELECTRONICS CORPORATION. ALL RIGHTS RESERVED.

LOC	DIST
GP	00

REVISIONS

P	LTR	DESCRIPTION	DATE	DWN	APVD
	O	REL PER EC 0S13-0031-05	03-24-05	GA	JG

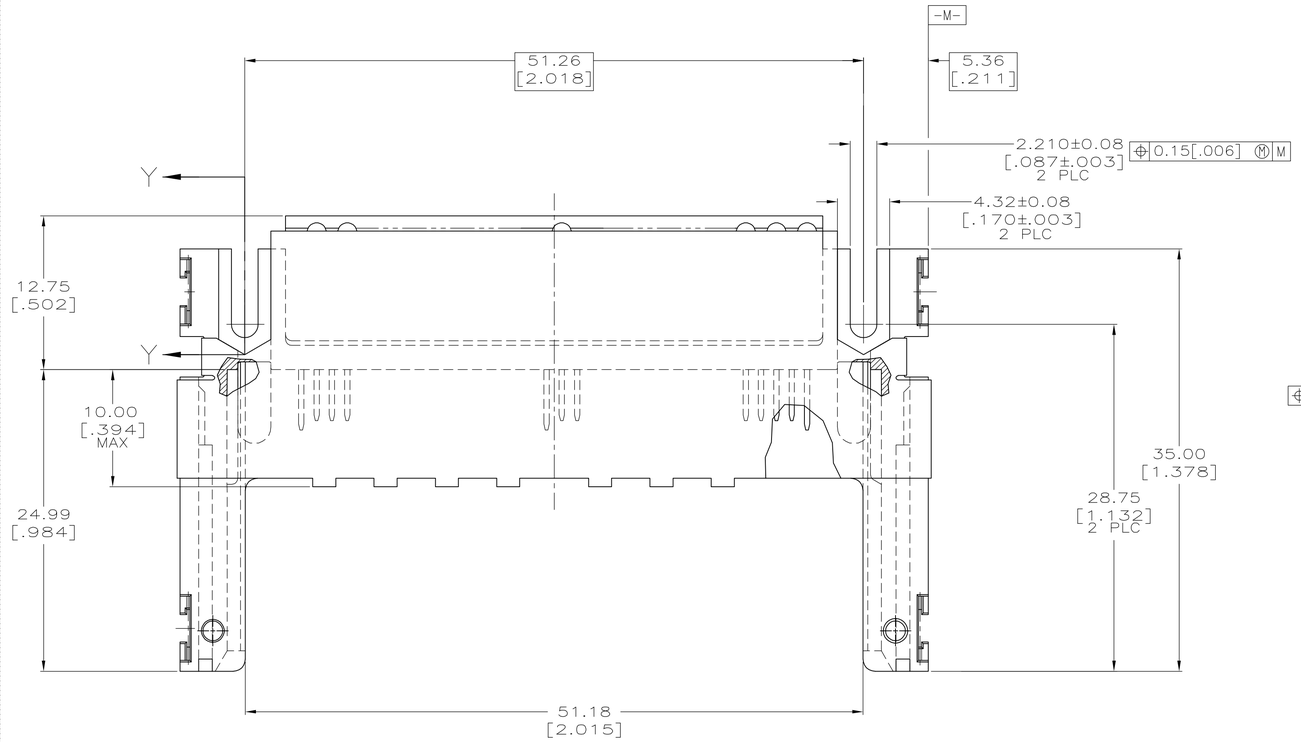

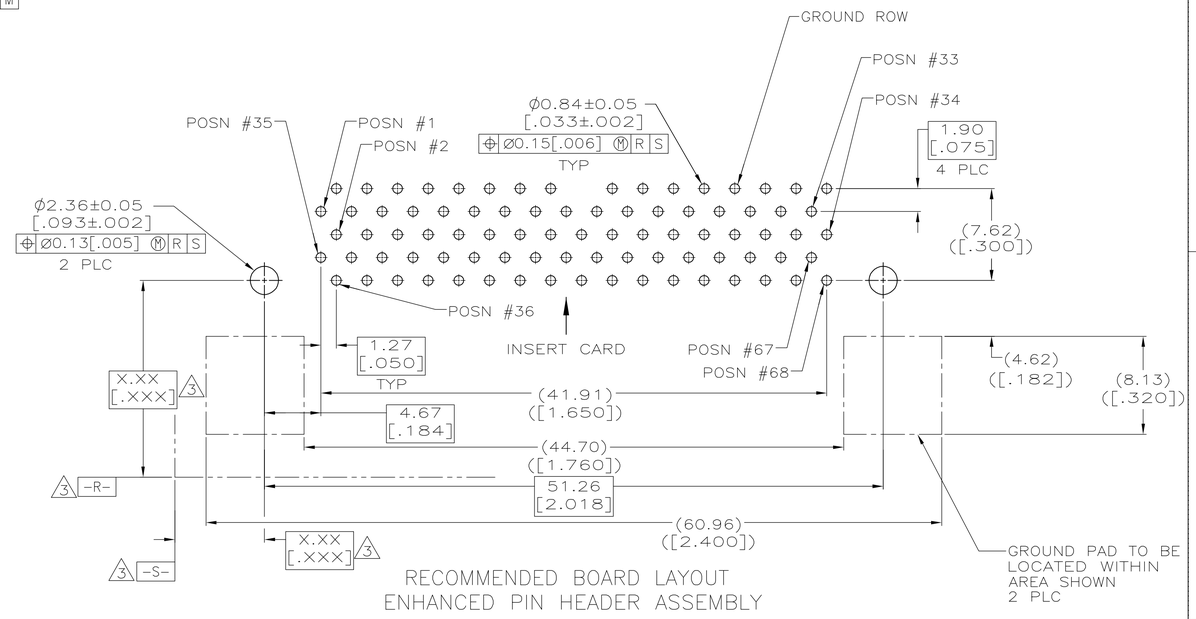

RECOMMENDED BOARD LAYOUT
ENHANCED PIN HEADER ASSEMBLY

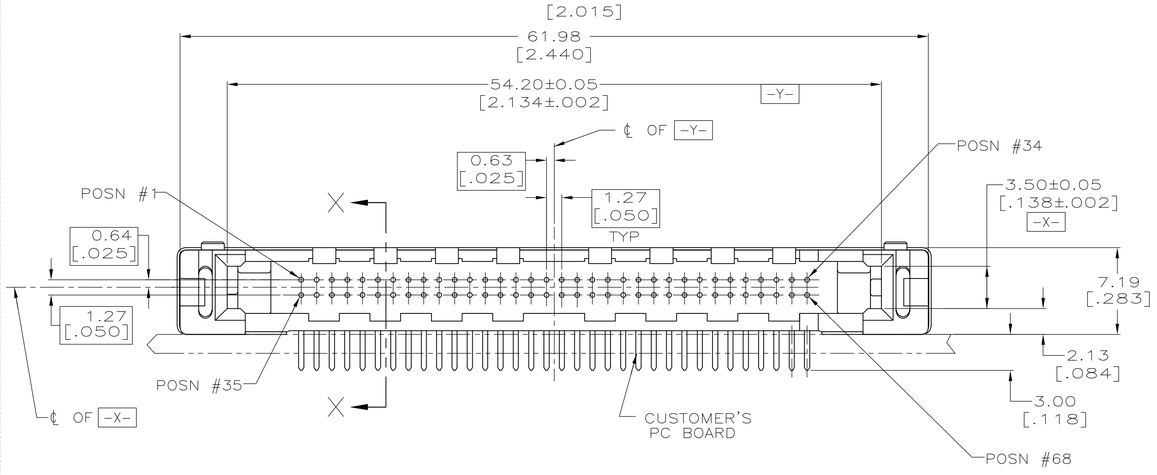

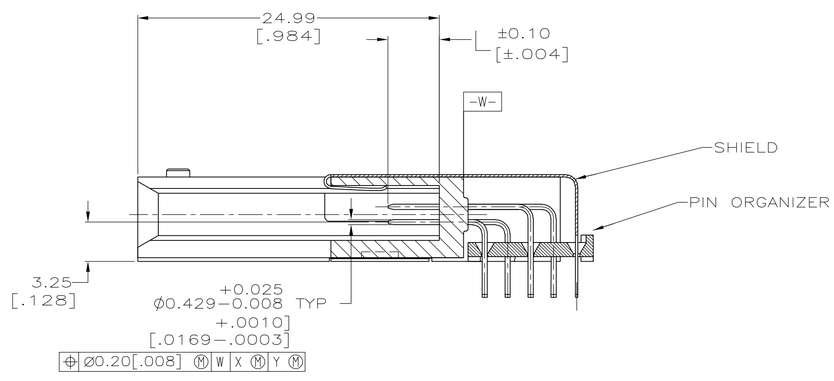

SECTION X-X

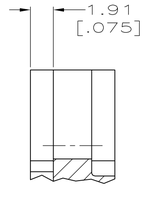

SECTION Y-Y

1. CONTACT & SHIELD:
   0.00076[.000030] MINIMUM GOLD IN CONTACT AREA,
   0.00381[.000150] MIN TIN ON SOLDER TAILS,
   ALL OVER 0.00127[.000050] MINIMUM NICKEL
2. CUSTOMER TO PROVIDE CARD GUIDANCE SYSTEM
3. DATUMS AND BASIC DIMENSIONS ESTABLISHED BY CUSTOMER
4. CONNECTOR REQUIRES USE OF 2 SIZE 2M SCREWS FOR FASTENING TO PRINTED CIRCUIT BOARD
5. ASSEMBLY KEYED FOR LOW VOLT CARDS (3.3V).
6. MATERIAL:
   HOUSING & ORGANIZER: LCP, COLOR; BLACK
   PIN: BRASS
   SHIELD: PHOSPHOR BRONZE

5	1,17,34 35,51,68	ALL OTHER PINS	36,67	5146321-1
VOLTAGE KEYING & IDENTIFICATION	5.0 [.197]	4.25 [.167]	3.5 [.138]	PART NUMBER
	"L" (PIN LENGTH) AND LOCATION			

COPYRIGHT 2005
TYCO ELECTRONICS CORP
ALL RIGHTS RESERVED

THIS DRAWING IS A CONTROLLED DOCUMENT.

DIMENSIONS: mm[INCHES]

TOLERANCES UNLESS OTHERWISE SPECIFIED:
0 PLC ± -
1 PLC ± -
2 PLC ± 0.13 [.005]
3 PLC ± -
4 PLC ± -
ANGLES ± 2°

MATERIAL 6
FINISH 1

DWN G. ATTADIA - DOCK5 03-24-05
CHK D.L. GORENC 03-24-05
APVD M. WALMSLEY 03-24-05
PRODUCT SPEC —
APPLICATION SPEC —
WEIGHT —

tyco Electronics
Tyco Electronics Corporation
Harrisburg, PA 17105-3608

NAME PIN HEADER ASSEMBLY, 68 POSN, TOP BOARD MTG, THRU-HOLE, AMP ENHANCED MEMORY CARD

SIZE	CAGE CODE	DRAWING NO	RESTRICTED TO
A1	00779	C-5146321	—

CUSTOMER DRAWING | SCALE 4:1 | SHEET 1 OF 1 | REV O

AMP 4805 REV 31MAR2000