LOOSE PIECE		TAPE MOUNTED							
MATERIAL NO.	ENGINEERING NO.	MATERIAL NO.	ENGINEERING NO.	STUD SIZE	DIMENSION B	DIMENSION C	DIMENSION L	DIMENSION W	
190980041	BB-1707-05	190980042	BB-1707-05T	5	.105/2.67	.230/5.84	.585/14.86	.265/6.73	B
190980043	BB-1707-06	190980044	BB-1707-06T	6	.114/2.90	.230/5.84	.585/14.86	.265/6.73	B
190980047	BB-1716-08	190980048	BB-1716-08T	8	.139/3.53	.261/6.63	.646/16.41	.320/8.13	
190980049	BB-1717-10	190980050	BB-1717-10T	10	.156/3.96	.261/6.63	.694/17.63	.340/8.64	

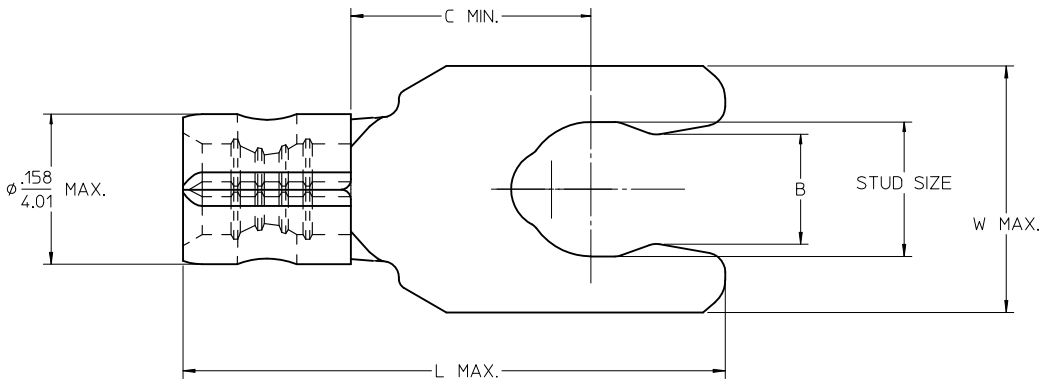

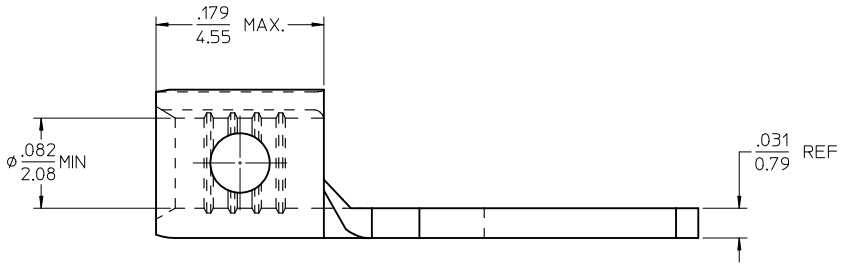

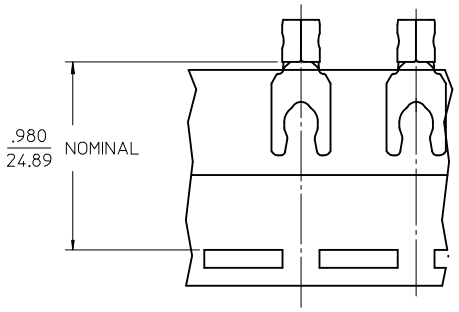

PARTS ON TAPE

NOTES:
1. MATERIAL: COPPER .031/0.79 THICK
2. PLATING: ELECTRO-TIN
3. PARTS ARE RoHS COMPLIANT

INCR TONGUE WIDTH
EC NO: WNA2010-0646
DRWN:RSTONE 2007/07/05
CH'KD:J.MACNEIL 2010/04/27
APPR: JMACNEIL 2010/05/14
DESCRIPTION
REV B

QUALITY SYMBOLS
▼=1
▽C=2

GENERAL TOLERANCES (UNLESS SPECIFIED)

	mm	INCH
4 PLACES	± ---	± ---
3 PLACES	± ---	± .005
2 PLACES	± 0.13	± .01
1 PLACE	± 0.25	± ---
ANGULAR ±1/2°		

DRAFT WHERE APPLICABLE MUST REMAIN WITHIN DIMENSIONS

DIMENSION STYLE: IN/MM
SCALE: 10:1
DESIGN UNITS: INCH
THIRD ANGLE PROJECTION

DRAWN BY: KO DATE: 1984/10/19
CHECKED BY: GZ DATE: 1984/11/02
APPROVED BY: --- DATE: ---

TITLE: SNAP SPADE TONGUE TERMINAL, 16-14 AWG

molex MOLEX INCORPORATED

MATERIAL NO.: SEE CHART
DOCUMENT NO.: SD-19098-004
SHEET NO.: 1 OF 1
SIZE: C

THIS DRAWING CONTAINS INFORMATION THAT IS PROPRIETARY TO MOLEX INCORPORATED AND SHOULD NOT BE USED WITHOUT WRITTEN PERMISSION