ELH Series, +85ºC

Electronic Components KEMET CHARGED.

Overview

KEMET's ELH Series of aluminum electrolytic snap-in capacitors are designed with snap-lock terminals for printed circuit board mounting. The case is aluminum with an insulated sleeve and safety vent at the bottom.

Applications

Typical applications include general purpose power electronics, UPS, SMPS and battery chargers.

Benefits

- Suited for high quality, high reliability applications
- Low impedance
- Operating temperature of up to 85°C
- 2,000 hour operating life
- RoHS Compliant and lead-free

Part Number System

ELH	159	M	6R3		A	Q1	AA
Series	Capacitance Code (pF)	Tolerance	Rated Voltage (VDC)		Electrical Parameters	Size Code	Packaging
Snap-In Aluminum Electrolytic	Digits 4 – 5 represent the first two digits of the capacitance value. The final digit indicates the number of zeros to be added.	M = ±20%	6R3 = 6.3 010 = 10 016 = 16 025 = 25 035 = 35 050 = 50 063 = 63 080 = 80	100 = 100 160 = 160 180 = 180 200 = 200 250 = 250 350 = 350 400 = 400 450 = 450	A = Standard	See Dimension Table	See Ordering Options Table

Ordering Options Table

Packaging Type	Lead Length (mm)	Lead and Packaging Code
Standard Bulk Packaging Options		
Bulk (box)	5.8 ± 1.0	AA
Bulk (box)	4.0 ± 0.2	AV

© KEMET Electronics Corporation • P.O. Box 5928 • Greenville, SC 29606 (864) 963-6300 • www.kemet.com

Dimensions – Millimeters

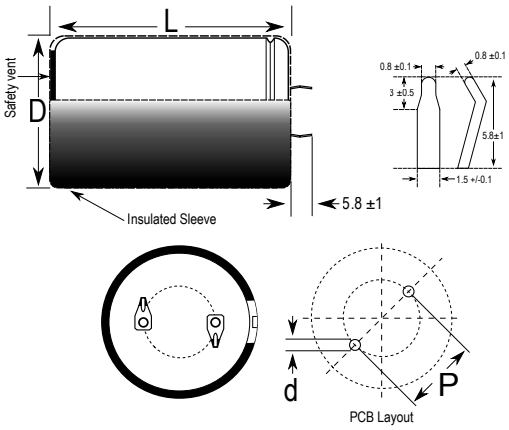

Size Code	D		L		p	
	Nominal	Tolerance	Nominal	Tolerance	Nominal	Tolerance
Q7	22	+1.0/-0	20	+2.0/-0	10.0	±0.5
Q1	22	+1.0/-0	25	+2.0/-0	10.0	±0.5
Q2	22	+1.0/-0	30	+2.0/-0	10.0	±0.5
Q3	22	+1.0/-0	35	+2.0/-0	10.0	±0.5
Q4	22	+1.0/-0	40	+2.0/-0	10.0	±0.5
Q5	22	+1.0/-0	45	+2.0/-0	10.0	±0.5
Q6	22	+1.0/-0	50	+2.0/-0	10.0	±0.5
R7	25	+1.0/-0	20	+2.0/-0	10.0	±0.5
R1	25	+1.0/-0	25	+2.0/-0	10.0	±0.5
R2	25	+1.0/-0	30	+2.0/-0	10.0	±0.5
R3	25	+1.0/-0	35	+2.0/-0	10.0	±0.5
R4	25	+1.0/-0	40	+2.0/-0	10.0	±0.5
R5	25	+1.0/-0	45	+2.0/-0	10.0	±0.5
R6	25	+1.0/-0	50	+2.0/-0	10.0	±0.5
S1	30	+1.0/-0	25	+2.0/-0	10.0	±0.5
S2	30	+1.0/-0	30	+2.0/-0	10.0	±0.5
S3	30	+1.0/-0	35	+2.0/-0	10.0	±0.5
S4	30	+1.0/-0	40	+2.0/-0	10.0	±0.5
S5	30	+1.0/-0	45	+2.0/-0	10.0	±0.5
S6	30	+1.0/-0	50	+2.0/-0	10.0	±0.5
T1	35	+1.0/-0	25	+2.0/-0	10.0	±0.5
T2	35	+1.0/-0	30	+2.0/-0	10.0	±0.5
T3	35	+1.0/-0	35	+2.0/-0	10.0	±0.5
T4	35	+1.0/-0	40	+2.0/-0	10.0	±0.5
T5	35	+1.0/-0	45	+2.0/-0	10.0	±0.5
T6	35	+1.0/-0	50	+2.0/-0	10.0	±0.5
T8	35	+1.0/-0	60	+2.0/-0	10.0	±0.5

Performance Characteristics

Item	Performance Characteristics	
Capacitance Range	820 – 120000 µF	47 – 2700 µF
Capacitance Tolerance	±20% at 120 Hz / 20°C	
Rated Voltage	6.3 – 100 VDC	160 – 450 VDC
Life Test	2,000 hours (see conditions in Test Methods & Performance)	
Operating Temperature	-40°C to +85°C	-25°C to +85°C
Leakage Current	I = 0.02 CV (mA) or 3 mA, whichever is smaller	
	C = rated capacitance (µF), V = rated voltage (VDC). Voltage applied for 5 minutes at 20°C.	

Impedance Z Characteristics at 120 Hz

Rated Voltage (VDC)	6.3 – 16	25	35	50 – 63	80 – 100	160 – 400	450
Z (-25°C) / Z (20°C)	3	3	3	2	2	4	8
Z (-40°C) / Z (20°C)	12	10	8	6	5		

Compensation Factor of Ripple Current (RC) vs. Frequency

Rated Voltage (VDC)	50 Hz	60 Hz	120 Hz	1 kHz	10 – 100 kHz
6.3 – 100	0.88	0.90	1.00	1.15	1.16
160 – 250	0.75	0.78	1.00	1.16	1.23
350 – 450	0.74	0.76	1.00	1.10	1.15

Compensation Factor of Ripple Current (RC) vs. Temperature

Temperature	40°C	60°C	70°C	85°C
Coefficient	1.48	1.42	1.30	1.00

Test Method & Performance

Conditions	Load Life Test	Shelf Life Test
Temperature	85°C	85°C
Test Duration	2,000 hours	1,000 hours
Ripple Current	Maximum ripple current specified at 120 kHz 85°C specified in table	No ripple current applied
Voltage	The sum of DC voltage and the peak AC voltage must not exceed the rated voltage of the capacitor	No voltage applied
Performance	**The following specifications will be satisfied when the capacitor is restored to 20°C:**	
Capacitance Change	Within ±20% of the initial value	
Dissipation Factor	Does not exceed 200% of the specified value	Does not exceed 150% of the specified value
Leakage Current	Does not exceed initial requirement	

Environmental Compliance

As an environmentally conscious company, KEMET is working continuously with improvements concerning the environmental effects of both our capacitors and their production. In Europe (RoHS Directive) and in some other geographical areas like China, legislation has been put in place to prevent the use of some hazardous materials, such as lead (Pb), in electronic equipment. All products in this catalog are produced to help our customers' obligations to guarantee their products and fulfill these legislative requirements. The only material of concern in our products has been lead (Pb), which has been removed from all designs to fulfill the requirement of containing less than 0.1% of lead in any homogeneous material. KEMET will closely follow any changes in legislation world wide and makes any necessary changes in its products, whenever needed.

Some customer segments such as medical, military and automotive electronics may still require the use of lead in electrode coatings. To clarify the situation and distinguish products from each other, a special symbol is used on the packaging labels for RoHS compatible capacitors.

Because of customer requirements, there may appear additional markings such as LF = Lead Free or LFW = Lead Free Wires on the label.

RoHS Compliant

Table 1A – Ratings & Part Number Reference

VDC	VDC Surge Voltage	Rated Capacitance 120 Hz 20°C (µF)	Case Size D x L (mm)	DF 120 Hz 20°C (tan δ %)*	RC 120 Hz 85°C (A)	LC 20°C 5 Minutes (mA)	Part Number
6.3	8	15000	22 x 25	60	2.44	1.9	ELH159M6R3AQ1(1)
6.3	8	18000	22 x 30	60	2.60	2.3	ELH189M6R3AQ2(1)
6.3	8	18000	25 x 25	60	2.62	2.3	ELH189M6R3AR1(1)
6.3	8	22000	22 x 30	60	3.06	2.8	ELH229M6R3AQ2(1)
6.3	8	22000	25 x 25	60	3.07	2.8	ELH229M6R3AR1(1)
6.3	8	27000	22 x 35	60	3.49	3.0	ELH279M6R3AQ3(1)
6.3	8	27000	25 x 30	60	3.52	3.0	ELH279M6R3AR2(1)
6.3	8	27000	30 x 25	60	3.57	3.0	ELH279M6R3AS1(1)
6.3	8	33000	22 x 40	60	3.97	3.0	ELH339M6R3AQ4(1)
6.3	8	33000	25 x 35	60	4.02	3.0	ELH339M6R3AR3(1)
6.3	8	33000	30 x 30	60	4.05	3.0	ELH339M6R3AS2(1)
6.3	8	33000	35 x 25	60	4.10	3.0	ELH339M6R3AT1(1)
6.3	8	39000	22 x 45	60	4.56	3.0	ELH399M6R3AQ5(1)
6.3	8	39000	25 x 40	60	4.50	3.0	ELH399M6R3AR4(1)
6.3	8	39000	30 x 30	60	4.46	3.0	ELH399M6R3AS2(1)
6.3	8	39000	35 x 25	60	4.51	3.0	ELH399M6R3AT1(1)
6.3	8	47000	25 x 45	60	5.09	3.0	ELH479M6R3AR5(1)
6.3	8	47000	30 x 35	60	5.06	3.0	ELH479M6R3AS3(1)
6.3	8	47000	35 x 30	60	5.03	3.0	ELH479M6R3AT2(1)
6.3	8	56000	25 x 50	60	5.71	3.0	ELH569M6R3AR6(1)
6.3	8	56000	30 x 40	60	5.70	3.0	ELH569M6R3AS4(1)
6.3	8	56000	35 x 30	60	5.75	3.0	ELH569M6R3AT2(1)
6.3	8	68000	30 x 45	60	6.48	3.0	ELH689M6R3AS5(1)
6.3	8	68000	35 x 35	60	6.42	3.0	ELH689M6R3AT3(1)
6.3	8	82000	30 x 50	60	7.32	3.0	ELH829M6R3AS6(1)
6.3	8	82000	35 x 40	60	7.29	3.0	ELH829M6R3AT4(1)
6.3	8	100000	35 x 45	60	8.31	3.0	ELH10KM6R3AT5(1)
6.3	8	120000	35 x 50	60	8.60	3.0	ELH12KM6R3AT6(1)
10	13	12000	22 x 25	55	2.40	2.4	ELH129M010AQ1(1)
10	13	15000	22 x 30	55	2.75	3.0	ELH159M010AQ2(1)
10	13	15000	25 x 25	55	2.75	3.0	ELH159M010AR1(1)
10	13	18000	22 x 35	55	3.15	3.0	ELH189M010AQ3(1)
10	13	18000	25 x 25	55	3.05	3.0	ELH189M010AR1(1)
10	13	22000	22 x 40	55	3.55	3.0	ELH229M010AQ4(1)
10	13	22000	25 x 30	55	3.50	3.0	ELH229M010AR2(1)
10	13	22000	30 x 25	55	3.55	3.0	ELH229M010AS1(1)
10	13	27000	22 x 45	55	4.05	3.0	ELH279M010AQ5(1)
10	13	27000	25 x 35	55	4.00	3.0	ELH279M010AR3(1)
10	13	27000	30 x 30	55	4.05	3.0	ELH279M010AS2(1)
10	13	33000	22 x 50	55	4.60	3.0	ELH339M010AQ6(1)
10	13	33000	25 x 40	55	4.55	3.0	ELH339M010AR4(1)
10	13	33000	30 x 30	55	4.50	3.0	ELH339M010AS2(1)
10	13	33000	35 x 25	55	4.50	3.0	ELH339M010AT1(1)
10	13	39000	25 x 45	55	5.10	3.0	ELH399M010AR5(1)
10	13	39000	30 x 35	55	5.05	3.0	ELH399M010AS3(1)
10	13	39000	35 x 30	55	5.05	3.0	ELH399M010AT2(1)
10	13	47000	25 x 50	55	5.75	3.0	ELH479M010AR6(1)
10	13	47000	30 x 40	55	5.70	3.0	ELH479M010AS4(1)
10	13	47000	35 x 30	55	5.65	3.0	ELH479M010AT2(1)
10	13	56000	30 x 45	55	6.45	3.0	ELH569M010AS5(1)
10	13	56000	35 x 35	55	6.40	3.0	ELH569M010AT3(1)
10	13	68000	30 x 50	55	7.05	3.0	ELH689M010AS6(1)
10	13	68000	35 x 40	55	7.10	3.0	ELH689M010AT4(1)
10	13	82000	35 x 50	55	7.50	3.0	ELH829M010AT6(1)
16	20	8200	22 x 25	55	2.60	2.6	ELH828M016AQ1(1)
16	20	10000	22 x 30	55	2.70	3.0	ELH109M016AQ2(1)
16	20	10000	25 x 25	55	2.75	3.0	ELH109M016AR1(1)
16	20	12000	22 x 30	55	2.90	3.0	ELH129M016AQ2(1)
VDC	**VDC Surge**	**Rated Capacitance**	**Case Size**	**DF**	**RC**	**LC**	**Part Number**

(1) Insert packaging code. See Ordering Options Table for available options.

** When capacitance exceeds 1,000 µF, the DF value (%) is increased by 2% for every additional 1,000 µF.*

Table 1A – Ratings & Part Number Reference cont'd

VDC	VDC Surge Voltage	Rated Capacitance 120 Hz 20°C (µF)	Case Size D x L (mm)	DF 120 Hz 20°C (tan δ %)*	RC 120 Hz 85°C (A)	LC 20°C 5 Minutes (mA)	Part Number
16	20	12000	25 x 25	55	2.95	3.0	ELH129M016AR1(1)
16	20	15000	22 x 35	55	3.30	3.0	ELH159M016AQ3(1)
16	20	15000	25 x 30	55	3.45	3.0	ELH159M016AR2(1)
16	20	15000	30 x 25	55	3.50	3.0	ELH159M016AS1(1)
16	20	18000	22 x 40	55	3.70	3.0	ELH189M016AQ4(1)
16	20	18000	25 x 35	55	3.75	3.0	ELH189M016AR3(1)
16	20	18000	30 x 30	55	3.80	3.0	ELH189M016AS2(1)
16	20	22000	22 x 50	55	4.35	3.0	ELH229M016AQ6(1)
16	20	22000	25 x 40	55	4.30	3.0	ELH229M016AR4(1)
16	20	22000	30 x 30	55	4.25	3.0	ELH229M016AS2(1)
16	20	22000	35 x 25	55	4.20	3.0	ELH229M016AT1(1)
16	20	27000	25 x 45	55	4.70	3.0	ELH279M016AR5(1)
16	20	27000	30 x 35	55	4.65	3.0	ELH279M016AS3(1)
16	20	27000	35 x 30	55	4.65	3.0	ELH279M016AT2(1)
16	20	33000	30 x 40	55	5.35	3.0	ELH339M016AS4(1)
16	20	33000	35 x 30	55	5.40	3.0	ELH339M016AT2(1)
16	20	39000	30 x 45	55	6.00	3.0	ELH399M016AS5(1)
16	20	39000	35 x 35	55	5.95	3.0	ELH399M016AT3(1)
16	20	47000	30 x 50	55	6.80	3.0	ELH479M016AS6(1)
16	20	47000	35 x 40	55	6.75	3.0	ELH479M016AT4(1)
16	20	56000	35 x 45	55	7.60	3.0	ELH569M016AT5(1)
16	20	68000	35 x 50	55	8.00	3.0	ELH689M016AT6(1)
25	32	5600	22 x 25	45	2.20	2.8	ELH568M025AQ1(1)
25	32	6800	22 x 30	45	2.40	3.0	ELH688M025AQ2(1)
25	32	6800	25 x 25	45	2.45	3.0	ELH688M025AR1(1)
25	32	8200	22 x 35	45	2.70	3.0	ELH828M025AQ3(1)
25	32	8200	25 x 25	45	2.70	3.0	ELH828M025AR1(1)
25	32	10000	22 x 40	45	3.10	3.0	ELH109M025AQ4(1)
25	32	10000	25 x 30	45	3.15	3.0	ELH109M025AR2(1)
25	32	10000	30 x 25	45	3.20	3.0	ELH109M025AS1(1)
25	32	12000	22 x 45	45	3.50	3.0	ELH129M025AQ5(1)
25	32	12000	25 x 35	45	3.45	3.0	ELH129M025AR3(1)
25	32	12000	30 x 30	45	3.50	3.0	ELH129M025AS2(1)
25	32	12000	35 x 25	45	3.55	3.0	ELH129M025AT1(1)
25	32	15000	22 x 50	45	4.00	3.0	ELH159M025AQ6(1)
25	32	15000	25 x 40	45	3.95	3.0	ELH159M025AR4(1)
25	32	15000	30 x 35	45	4.00	3.0	ELH159M025AS3(1)
25	32	15000	35 x 30	45	4.05	3.0	ELH159M025AT2(1)
25	32	18000	25 x 45	45	4.45	3.0	ELH189M025AR5(1)
25	32	18000	30 x 35	45	4.45	3.0	ELH189M025AS3(1)
25	32	18000	35 x 30	45	4.60	3.0	ELH189M025AT2(1)
25	32	22000	30 x 40	45	5.20	3.0	ELH229M025AS4(1)
25	32	22000	35 x 35	45	5.15	3.0	ELH229M025AT3(1)
25	32	27000	30 x 45	45	5.95	3.0	ELH279M025AS5(1)
25	32	27000	35 x 40	45	5.90	3.0	ELH279M025AT4(1)
25	32	33000	30 x 50	45	6.70	3.0	ELH339M025AS6(1)
25	32	33000	35 x 45	45	6.75	3.0	ELH339M025AT5(1)
25	32	39000	35 x 50	45	7.55	3.0	ELH399M025AT6(1)
35	63	3900	22 x 25	35	2.20	2.7	ELH388M035AQ1(1)
35	63	4700	22 x 30	35	2.40	3.0	ELH478M035AQ2(1)
35	63	4700	25 x 25	35	2.40	3.0	ELH478M035AR1(1)
35	63	5600	22 x 35	35	2.75	3.0	ELH568M035AQ3(1)
35	63	5600	25 x 25	35	2.75	3.0	ELH568M035AR1(1)
35	63	6800	22 x 40	35	2.85	3.0	ELH688M035AQ4(1)
35	63	6800	25 x 30	35	2.85	3.0	ELH688M035AR2(1)
35	63	6800	30 x 25	35	2.90	3.0	ELH688M035AS1(1)
35	63	8200	22 x 45	35	3.15	3.0	ELH828M035AQ5(1)
35	63	8200	25 x 35	35	3.10	3.0	ELH828M035AR3(1)
VDC	**VDC Surge**	**Rated Capacitance**	**Case Size**	**DF**	**RC**	**LC**	**Part Number**

(1) Insert packaging code. See Ordering Options Table for available options.

** When capacitance exceeds 1,000 µF, the DF value (%) is increased by 2% for every additional 1,000 µF.*

Table 1A – Ratings & Part Number Reference cont'd

VDC	VDC Surge Voltage	Rated Capacitance 120 Hz 20°C (µF)	Case Size D x L (mm)	DF 120 Hz 20°C (tan δ %)*	RC 120 Hz 85°C (A)	LC 20°C 5 Minutes (mA)	Part Number
35	63	8200	30 x 30	35	3.15	3.0	ELH828M035AS2(1)
35	63	10000	22 x 50	35	3.55	3.0	ELH109M035AQ6(1)
35	63	10000	25 x 40	35	3.50	3.0	ELH109M035AR4(1)
35	63	10000	30 x 30	35	3.45	3.0	ELH109M035AS2(1)
35	63	10000	35 x 25	35	3.40	3.0	ELH109M035AT1(1)
35	63	12000	25 x 45	35	3.95	3.0	ELH129M035AR5(1)
35	63	12000	30 x 35	35	4.00	3.0	ELH129M035AS3(1)
35	63	12000	35 x 30	35	4.05	3.0	ELH129M035AT2(1)
35	63	15000	25 x 50	35	4.95	3.0	ELH159M035AR6(1)
35	63	15000	30 x 40	35	4.95	3.0	ELH159M035AS4(1)
35	63	15000	35 x 35	35	5.00	3.0	ELH159M035AT3(1)
35	63	18000	30 x 45	35	5.50	3.0	ELH189M035AS5(1)
35	63	18000	35 x 40	35	5.55	3.0	ELH189M035AT4(1)
35	63	22000	30 x 50	35	6.00	3.0	ELH229M035AS6(1)
35	63	22000	35 x 45	35	6.05	3.0	ELH229M035AT5(1)
35	63	27000	35 x 50	35	6.90	3.0	ELH279M035AT6(1)
50	63	2700	22 x 30	30	2.10	2.7	ELH278M050AQ2(1)
50	63	2700	25 x 25	30	2.20	2.7	ELH278M050AR1(1)
50	63	3300	22 x 30	30	2.35	3.0	ELH338M050AQ2(1)
50	63	3300	25 x 25	30	2.35	3.0	ELH338M050AR1(1)
50	63	3900	22 x 35	30	2.65	3.0	ELH398M050AQ3(1)
50	63	3900	25 x 30	30	2.65	3.0	ELH398M050AR2(1)
50	63	3900	30 x 25	30	2.65	3.0	ELH398M050AS1(1)
50	63	4700	22 x 40	30	3.00	3.0	ELH478M050AQ4(1)
50	63	4700	25 x 35	30	3.00	3.0	ELH478M050AR3(1)
50	63	4700	30 x 25	30	2.95	3.0	ELH478M050AS1(1)
50	63	5600	22 x 45	30	3.35	3.0	ELH568M050AQ5(1)
50	63	5600	25 x 40	30	3.35	3.0	ELH568M050AR4(1)
50	63	5600	30 x 30	30	3.35	3.0	ELH568M050AS2(1)
50	63	5600	35 x 25	30	3.40	3.0	ELH568M050AT1(1)
50	63	6800	22 x 50	30	3.80	3.0	ELH688M050AQ6(1)
50	63	6800	25 x 40	30	3.80	3.0	ELH688M050AR4(1)
50	63	6800	30 x 30	30	3.80	3.0	ELH688M050AS2(1)
50	63	6800	30 x 35	30	3.85	3.0	ELH688M050AS3(1)
50	63	6800	35 x 30	30	3.85	3.0	ELH688M050AT2(1)
50	63	8200	25 x 50	30	4.35	3.0	ELH828M050AR6(1)
50	63	8200	30 x 40	30	4.35	3.0	ELH828M050AS4(1)
50	63	8200	35 x 30	30	4.40	3.0	ELH828M050AT2(1)
50	63	10000	30 x 45	30	5.00	3.0	ELH109M050AS5(1)
50	63	10000	35 x 35	30	4.95	3.0	ELH109M050AT3(1)
50	63	12000	30 x 50	30	5.60	3.0	ELH129M050AS6(1)
50	63	12000	35 x 40	30	5.55	3.0	ELH129M050AT4(1)
50	63	15000	35 x 45	30	6.45	3.0	ELH159M050AT5(1)
50	63	18000	35 x 50	30	6.70	3.0	ELH189M050AT6(1)
63	79	1800	22 x 25	25	1.85	2.3	ELH188M063AQ1(1)
63	79	2200	22 x 30	25	2.30	2.8	ELH228M063AQ2(1)
63	79	2200	25 x 25	25	2.30	2.8	ELH228M063AR1(1)
63	79	2700	22 x 35	25	2.45	3.0	ELH278M063AQ3(1)
63	79	2700	25 x 30	25	2.45	3.0	ELH278M063AR2(1)
63	79	2700	30 x 25	25	2.50	3.0	ELH278M063AS1(1)
63	79	3300	22 x 40	25	2.60	3.0	ELH338M063AQ4(1)
63	79	3300	25 x 30	25	2.65	3.0	ELH338M063AR2(1)
63	79	3300	30 x 25	25	2.70	3.0	ELH338M063AS1(1)
63	79	3900	22 x 45	25	2.95	3.0	ELH398M063AQ5(1)
63	79	3900	25 x 35	25	2.95	3.0	ELH398M063AR3(1)
63	79	3900	30 x 30	25	3.00	3.0	ELH398M063AS2(1)
63	79	4700	22 x 50	25	3.40	3.0	ELH478M063AQ6(1)
63	79	4700	25 x 40	25	3.35	3.0	ELH478M063AR4(1)
VDC	**VDC Surge**	**Rated Capacitance**	**Case Size**	**DF**	**RC**	**LC**	**Part Number**

(1) Insert packaging code. See Ordering Options Table for available options.

** When capacitance exceeds 1,000 µF, the DF value (%) is increased by 2% for every additional 1,000 µF.*

Table 1A – Ratings & Part Number Reference cont'd

VDC	VDC Surge Voltage	Rated Capacitance 120 Hz 20°C (µF)	Case Size D x L (mm)	DF 120 Hz 20°C (tan δ %)*	RC 120 Hz 85°C (A)	LC 20°C 5 Minutes (mA)	Part Number
63	79	4700	30 x 30	25	3.35	3.0	ELH478M063AS2(1)
63	79	4700	35 x 25	25	3.40	3.0	ELH478M063AT1(1)
63	79	5600	25 x 40	25	3.70	3.0	ELH568M063AR4(1)
63	79	5600	25 x 45	25	3.70	3.0	ELH568M063AR5(1)
63	79	5600	30 x 35	25	3.75	3.0	ELH568M063AS3(1)
63	79	5600	35 x 30	25	3.75	3.0	ELH568M063AT2(1)
63	79	6800	30 x 40	25	4.25	3.0	ELH688M063AS4(1)
63	79	6800	35 x 30	25	4.20	3.0	ELH688M063AT2(1)
63	79	8200	30 x 45	25	4.80	3.0	ELH828M063AS5(1)
63	79	8200	35 x 35	25	4.80	3.0	ELH828M063AT3(1)
63	79	10000	30 x 50	25	5.50	3.0	ELH109M063AS6(1)
63	79	10000	35 x 40	25	5.45	3.0	ELH109M063AT4(1)
63	79	12000	35 x 45	25	6.20	3.0	ELH129M063AT5(1)
80	100	1200	22 x 25	25	1.65	1.9	ELH128M080AQ1(1)
80	100	1500	22 x 30	25	1.90	2.4	ELH158M080AQ2(1)
80	100	1500	25 x 25	25	1.90	2.4	ELH158M080AR1(1)
80	100	1800	22 x 35	25	2.20	2.9	ELH188M080AQ3(1)
80	100	1800	25 x 30	25	2.20	2.9	ELH188M080AR2(1)
80	100	1800	30 x 25	25	2.20	2.9	ELH188M080AS1(1)
80	100	2200	22 x 40	25	2.45	3.0	ELH228M080AQ4(1)
80	100	2200	25 x 30	25	2.45	3.0	ELH228M080AR2(1)
80	100	2200	30 x 25	25	2.50	3.0	ELH228M080AS1(1)
80	100	2700	22 x 45	25	2.80	3.0	ELH278M080AQ5(1)
80	100	2700	25 x 35	25	2.80	3.0	ELH278M080AR3(1)
80	100	2700	30 x 30	25	2.85	3.0	ELH278M080AS2(1)
80	100	2700	35 x 25	25	2.85	3.0	ELH278M080AT1(1)
80	100	3300	22 x 50	25	3.15	3.0	ELH338M080AQ6(1)
80	100	3300	25 x 40	25	3.20	3.0	ELH338M080AR4(1)
80	100	3300	30 x 30	25	3.20	3.0	ELH338M080AS2(1)
80	100	3300	35 x 25	25	3.20	3.0	ELH338M080AT1(1)
80	100	3900	25 x 45	25	3.60	3.0	ELH398M080AR5(1)
80	100	3900	30 x 35	25	3.60	3.0	ELH398M080AS3(1)
80	100	3900	35 x 30	25	3.60	3.0	ELH398M080AT2(1)
80	100	4700	25 x 50	25	4.05	3.0	ELH478M080AR6(1)
80	100	4700	30 x 40	25	4.05	3.0	ELH478M080AS4(1)
80	100	4700	35 x 35	25	4.10	3.0	ELH478M080AT3(1)
80	100	5600	30 x 45	25	4.55	3.0	ELH568M080AS5(1)
80	100	5600	35 x 35	25	4.50	3.0	ELH568M080AT3(1)
80	100	6800	30 x 50	25	5.15	3.0	ELH688M080AS6(1)
80	100	6800	35 x 40	25	5.15	3.0	ELH688M080AT4(1)
80	100	8200	35 x 45	25	5.85	3.0	ELH828M080AT5(1)
80	100	10000	35 x 50	25	6.60	3.0	ELH109M080AT6(1)
100	125	820	22 x 25	25	1.85	1.6	ELH827M100AQ1(1)
100	125	1000	22 x 30	25	2.10	2.0	ELH108M100AQ2(1)
100	125	1000	25 x 25	25	2.10	2.0	ELH108M100AR1(1)
100	125	1200	22 x 35	25	2.40	2.4	ELH128M100AQ3(1)
100	125	1200	25 x 30	25	2.45	2.4	ELH128M100AR2(1)
100	125	1500	22 x 40	25	2.70	3.0	ELH158M100AQ4(1)
100	125	1500	25 x 30	25	2.75	3.0	ELH158M100AR2(1)
100	125	1500	30 x 25	25	2.75	3.0	ELH158M100AS1(1)
100	125	1800	22 x 45	25	3.10	3.0	ELH188M100AQ5(1)
100	125	1800	25 x 35	25	3.15	3.0	ELH188M100AR3(1)
100	125	1800	30 x 30	25	3.15	3.0	ELH188M100AS2(1)
100	125	1800	35 x 25	25	3.15	3.0	ELH188M100AT1(1)
100	125	2200	22 x 50	25	3.50	3.0	ELH228M100AQ6(1)
100	125	2200	25 x 40	25	3.55	3.0	ELH228M100AR4(1)
100	125	2200	30 x 30	25	3.55	3.0	ELH228M100AS2(1)
100	125	2200	35 x 25	25	3.60	3.0	ELH228M100AT1(1)
VDC	**VDC Surge**	**Rated Capacitance**	**Case Size**	**DF**	**RC**	**LC**	**Part Number**

(1) Insert packaging code. See Ordering Options Table for available options.

** When capacitance exceeds 1,000 µF, the DF value (%) is increased by 2% for every additional 1,000 µF.*

Table 1A – Ratings & Part Number Reference cont'd

VDC	VDC Surge Voltage	Rated Capacitance 120 Hz 20°C (µF)	Case Size D x L (mm)	DF 120 Hz 20°C (tan δ %)*	RC 120 Hz 85°C (A)	LC 20°C 5 Minutes (mA)	Part Number
100	125	2700	25 x 45	25	4.10	3.0	ELH278M100AR5(1)
100	125	2700	30 x 35	25	4.05	3.0	ELH278M100AS3(1)
100	125	2700	35 x 30	25	4.05	3.0	ELH278M100AT2(1)
100	125	3300	25 x 50	25	4.50	3.0	ELH338M100AR6(1)
100	125	3300	30 x 40	25	4.55	3.0	ELH338M100AS4(1)
100	125	3300	35 x 30	25	4.50	3.0	ELH338M100AT2(1)
100	125	3900	30 x 45	25	5.15	3.0	ELH398M100AS5(1)
100	125	3900	35 x 35	25	5.10	3.0	ELH398M100AT3(1)
100	125	4700	35 x 40	25	5.75	3.0	ELH478M100AT4(1)
100	125	5600	35 x 50	25	6.20	3.0	ELH568M100AT6(1)
VDC	**VDC Surge**	**Rated Capacitance**	**Case Size**	**DF**	**RC**	**LC**	**Part Number**

Table 1B – Ratings & Part Number Reference

VDC	VDC Surge Voltage	Rated Capacitance 120 Hz 20°C (µF)	Case Size D x L (mm)	DF 120 Hz 20°C (tan δ %)*	ESR Maximum 20 kHz 25°C (Ω)	RC 120 Hz 85°C (A)	LC 20°C 5 Minutes (mA)	Part Number
160	200	330	22 x 25	15	0.276	1.40	1.0	ELH337M160AQ1(1)
160	200	330	25 x 20	15	0.276	1.35	1.0	ELH337M160AR7(1)
160	200	390	22 x 25	15	0.234	1.55	1.2	ELH397M160AQ1(1)
160	200	390	22 x 30	15	0.234	1.55	1.2	ELH397M160AQ2(1)
160	200	390	25 x 25	15	0.234	1.55	1.2	ELH397M160AR1(1)
160	200	390	30 x 25	15	0.234	1.50	1.2	ELH397M160AS1(1)
160	200	470	22 x 30	15	0.210	1.75	1.5	ELH477M160AQ2(1)
160	200	470	25 x 25	15	0.212	1.75	1.5	ELH477M160AR1(1)
160	200	470	30 x 25	15	0.218	1.70	1.5	ELH477M160AS1(1)
160	200	560	22 x 30	15	0.178	1.95	1.8	ELH567M160AQ2(1)
160	200	560	25 x 30	15	0.178	1.95	1.8	ELH567M160AR2(1)
160	200	560	30 x 25	15	0.178	1.90	1.8	ELH567M160AS1(1)
160	200	680	22 x 40	15	0.146	2.20	2.2	ELH687M160AQ4(1)
160	200	680	25 x 30	15	0.146	2.20	2.2	ELH687M160AR2(1)
160	200	680	30 x 25	15	0.146	2.15	2.2	ELH687M160AS1(1)
160	200	820	22 x 45	15	0.121	2.50	2.6	ELH827M160AQ5(1)
160	200	820	25 x 35	15	0.121	2.55	2.6	ELH827M160AR3(1)
160	200	820	30 x 30	15	0.121	2.50	2.6	ELH827M160AS2(1)
160	200	820	35 x 25	15	0.121	2.50	2.6	ELH827M160AT1(1)
160	200	1000	22 x 50	15	0.110	2.85	3.0	ELH108M160AQ6(1)
160	200	1000	25 x 40	15	0.110	2.80	3.0	ELH108M160AR4(1)
160	200	1000	30 x 30	15	0.118	2.80	3.0	ELH108M160AS2(1)
160	200	1000	30 x 35	15	0.118	2.80	3.0	ELH108M160AS3(1)
160	200	1000	35 x 25	15	0.118	2.80	3.0	ELH108M160AT1(1)
160	200	1200	25 x 45	15	0.100	3.15	3.0	ELH128M160AR5(1)
160	200	1200	30 x 35	15	0.110	3.15	3.0	ELH128M160AS3(1)
160	200	1200	35 x 30	15	0.115	3.20	3.0	ELH128M160AT2(1)
160	200	1500	30 x 40	15	0.092	3.75	3.0	ELH158M160AS4(1)
160	200	1500	30 x 45	15	0.092	3.75	3.0	ELH158M160AS5(1)
160	200	1500	35 x 30	15	0.092	3.70	3.0	ELH158M160AT2(1)
160	200	1500	35 x 35	15	0.092	3.70	3.0	ELH158M160AT3(1)
160	200	1800	30 x 45	15	0.085	4.20	3.0	ELH188M160AS5(1)
160	200	1800	30 x 50	15	0.085	4.20	3.0	ELH188M160AS6(1)
VDC	**VDC Surge**	**Rated Capacitance**	**Case Size**	**DF**	**ESR**	**RC**	**LC**	**Part Number**

(1) Insert packaging code. See Ordering Options Table for available options.

** When capacitance exceeds 1,000 µF, the DF value (%) is increased by 2% for every additional 1,000 µF.*

Table 1B – Ratings & Part Number Reference cont'd

VDC	VDC Surge Voltage	Rated Capacitance 120 Hz 20°C (µF)	Case Size D x L (mm)	DF 120 Hz 20°C (tan δ %)*	ESR Maximum 20 kHz 25°C (Ω)	RC 120 Hz 85°C (A)	LC 20°C 5 Minutes (mA)	Part Number
160	200	1800	35 x 35	15	0.085	4.20	3.0	ELH188M160AT3(1)
160	200	1800	35 x 40	15	0.085	4.20	3.0	ELH188M160AT4(1)
160	200	2200	35 x 40	15	0.075	4.60	3.0	ELH228M160AT4(1)
160	200	2200	35 x 45	15	0.075	4.80	3.0	ELH228M160AT5(1)
160	200	2700	35 x 50	15	0.060	5.45	3.0	ELH278M160AT6(1)
180	225	180	22 x 20	15	0.380	1.00	0.6	ELH187M180AQ7(1)
180	225	220	22 x 25	15	0.350	1.10	0.8	ELH227M180AQ1(1)
180	225	270	22 x 25	15	0.270	1.25	1.0	ELH277M180AQ1(1)
180	225	270	25 x 20	15	0.270	1.25	1.0	ELH277M180AR7(1)
180	225	330	22 x 25	15	0.240	1.40	1.2	ELH337M180AQ1(1)
180	225	330	22 x 30	15	0.240	1.40	1.2	ELH337M180AQ2(1)
180	225	330	25 x 25	15	0.240	1.40	1.2	ELH337M180AR1(1)
180	225	390	22 x 30	15	0.195	1.60	1.4	ELH397M180AQ2(1)
180	225	390	25 x 25	15	0.195	1.60	1.4	ELH397M180AR1(1)
180	225	470	22 x 35	15	0.175	1.80	1.7	ELH477M180AQ3(1)
180	225	470	25 x 30	15	0.175	1.80	1.7	ELH477M180AR2(1)
180	225	470	30 x 25	15	0.175	1.80	1.7	ELH477M180AS1(1)
180	225	560	22 x 35	15	0.140	2.00	2.0	ELH567M180AQ3(1)
180	225	560	22 x 40	15	0.140	2.00	2.0	ELH567M180AQ4(1)
180	225	560	25 x 30	15	0.140	1.95	2.0	ELH567M180AR2(1)
180	225	560	30 x 25	15	0.140	2.00	2.0	ELH567M180AS1(1)
180	225	680	22 x 45	15	0.135	2.25	2.4	ELH687M180AQ5(1)
180	225	680	25 x 35	15	0.135	2.20	2.4	ELH687M180AR3(1)
180	225	680	30 x 30	15	0.135	2.20	2.4	ELH687M180AS2(1)
180	225	680	35 x 25	15	0.135	2.20	2.4	ELH687M180AT1(1)
180	225	820	22 x 50	15	0.110	2.55	2.9	ELH827M180AQ6(1)
180	225	820	25 x 40	15	0.110	2.55	2.9	ELH827M180AR4(1)
180	225	820	30 x 30	15	0.110	2.60	2.9	ELH827M180AS2(1)
180	225	820	30 x 35	15	0.110	2.60	2.9	ELH827M180AS3(1)
180	225	820	35 x 25	15	0.110	2.60	2.9	ELH827M180AT1(1)
180	225	1000	25 x 45	15	0.095	2.85	3.0	ELH108M180AR5(1)
180	225	1000	30 x 35	15	0.095	2.85	3.0	ELH108M180AS3(1)
180	225	1000	35 x 30	15	0.095	2.90	3.0	ELH108M180AT2(1)
180	225	1200	30 x 40	15	0.083	3.25	3.0	ELH128M180AS4(1)
180	225	1200	35 x 30	15	0.083	3.30	3.0	ELH128M180AT2(1)
180	225	1200	35 x 35	15	0.083	3.30	3.0	ELH128M180AT3(1)
180	225	1500	30 x 45	15	0.072	3.85	3.0	ELH158M180AS5(1)
180	225	1500	35 x 35	15	0.072	3.80	3.0	ELH158M180AT3(1)
180	225	1500	35 x 40	15	0.072	3.80	3.0	ELH158M180AT4(1)
180	225	1800	35 x 40	15	0.066	4.30	3.0	ELH188M180AT4(1)
180	225	1800	35 x 45	15	0.066	4.30	3.0	ELH188M180AT5(1)
180	225	2200	35 x 45	15	0.054	4.90	3.0	ELH228M180AT5(1)
180	225	2200	35 x 50	15	0.054	4.90	3.0	ELH228M180AT6(1)
200	250	180	22 x 25	15	0.350	0.95	0.7	ELH187M200AQ1(1)
200	250	220	22 x 25	15	0.320	1.10	0.9	ELH227M200AQ1(1)
200	250	270	22 x 25	15	0.255	1.25	1.1	ELH277M200AQ1(1)
200	250	270	22 x 30	15	0.255	1.25	1.1	ELH277M200AQ2(1)
200	250	270	25 x 25	15	0.255	1.25	1.1	ELH277M200AR1(1)
200	250	330	22 x 25	15	0.220	1.45	1.3	ELH337M200AQ1(1)
200	250	330	22 x 30	15	0.220	1.45	1.3	ELH337M200AQ2(1)
200	250	330	25 x 25	15	0.220	1.45	1.3	ELH337M200AR1(1)
200	250	390	22 x 30	15	0.180	1.60	1.6	ELH397M200AQ2(1)
200	250	390	25 x 25	15	0.180	1.55	1.6	ELH397M200AR1(1)
200	250	470	22 x 35	15	0.150	1.80	1.9	ELH477M200AQ3(1)
200	250	470	25 x 30	15	0.160	1.80	1.9	ELH477M200AR2(1)
200	250	470	30 x 25	15	0.160	1.80	1.9	ELH477M200AS1(1)
200	250	560	22 x 40	15	0.127	2.00	2.2	ELH567M200AQ4(1)
VDC	**VDC Surge**	**Rated Capacitance**	**Case Size**	**DF**	**ESR**	**RC**	**LC**	**Part Number**

(1) Insert packaging code. See Ordering Options Table for available options.

** When capacitance exceeds 1,000 µF, the DF value (%) is increased by 2% for every additional 1,000 µF.*

Table 1B – Ratings & Part Number Reference cont'd

VDC	VDC Surge Voltage	Rated Capacitance 120 Hz 20°C (µF)	Case Size D x L (mm)	DF 120 Hz 20°C (tan δ %)*	ESR Maximum 20 kHz 25°C (Ω)	RC 120 Hz 85°C (A)	LC 20°C 5 Minutes (mA)	Part Number
200	250	560	25 x 35	15	0.117	2.00	2.2	ELH567M200AR3(1)
200	250	560	30 x 25	15	0.120	2.00	2.2	ELH567M200AS1(1)
200	250	680	22 x 45	15	0.121	2.35	2.7	ELH687M200AQ5(1)
200	250	680	25 x 35	15	0.121	2.30	2.7	ELH687M200AR3(1)
200	250	680	30 x 30	15	0.121	2.30	2.7	ELH687M200AS2(1)
200	250	680	35 x 25	15	0.125	2.30	2.7	ELH687M200AT1(1)
200	250	820	25 x 40	15	0.100	2.60	3.0	ELH827M200AR4(1)
200	250	820	25 x 45	15	0.100	2.60	3.0	ELH827M200AR5(1)
200	250	820	30 x 30	15	0.100	2.60	3.0	ELH827M200AS2(1)
200	250	820	30 x 35	15	0.100	2.60	3.0	ELH827M200AS3(1)
200	250	820	35 x 30	15	0.100	2.60	3.0	ELH827M200AT2(1)
200	250	1000	25 x 45	15	0.090	3.00	3.0	ELH108M200AR5(1)
200	250	1000	25 x 50	15	0.090	3.00	3.0	ELH108M200AR6(1)
200	250	1000	30 x 35	15	0.090	3.05	3.0	ELH108M200AS3(1)
200	250	1000	30 x 40	15	0.090	3.05	3.0	ELH108M200AS4(1)
200	250	1000	35 x 30	15	0.090	3.00	3.0	ELH108M200AT2(1)
200	250	1200	25 x 50	15	0.080	3.30	3.0	ELH128M200AR6(1)
200	250	1200	30 x 40	15	0.080	3.30	3.0	ELH128M200AS4(1)
200	250	1200	30 x 45	15	0.080	3.30	3.0	ELH128M200AS5(1)
200	250	1200	35 x 30	15	0.080	3.30	3.0	ELH128M200AT2(1)
200	250	1200	35 x 35	15	0.080	3.30	3.0	ELH128M200AT3(1)
200	250	1500	30 x 45	15	0.072	3.80	3.0	ELH158M200AS5(1)
200	250	1500	30 x 50	15	0.072	3.80	3.0	ELH158M200AS6(1)
200	250	1500	35 x 35	15	0.072	3.80	3.0	ELH158M200AT3(1)
200	250	1500	35 x 40	15	0.072	3.80	3.0	ELH158M200AT4(1)
200	250	1800	35 x 40	15	0.060	4.35	3.0	ELH188M200AT4(1)
200	250	1800	35 x 45	15	0.060	4.35	3.0	ELH188M200AT5(1)
200	250	2200	35 x 45	15	0.054	4.95	3.0	ELH228M200AT5(1)
200	250	2200	35 x 50	15	0.054	4.95	3.0	ELH228M200AT6(1)
250	300	120	22 x 20	15	0.660	0.78	0.6	ELH127M250AQ7(1)
250	300	150	22 x 25	15	0.485	0.90	0.7	ELH157M250AQ1(1)
250	300	180	22 x 25	15	0.365	1.05	0.9	ELH187M250AQ1(1)
250	300	180	25 x 20	15	0.365	1.00	0.9	ELH187M250AR7(1)
250	300	220	22 x 30	15	0.298	1.15	1.1	ELH227M250AQ2(1)
250	300	220	22 x 35	15	0.298	1.15	1.1	ELH227M250AQ3(1)
250	300	220	25 x 25	15	0.298	1.15	1.1	ELH227M250AR1(1)
250	300	270	22 x 30	15	0.245	1.30	1.3	ELH277M250AQ2(1)
250	300	270	25 x 25	15	0.245	1.30	1.3	ELH277M250AR1(1)
250	300	330	22 x 30	15	0.219	1.50	1.6	ELH337M250AQ2(1)
250	300	330	22 x 35	15	0.219	1.50	1.6	ELH337M250AQ3(1)
250	300	330	25 x 25	15	0.219	1.50	1.6	ELH337M250AR1(1)
250	300	330	25 x 30	15	0.219	1.50	1.6	ELH337M250AR2(1)
250	300	330	30 x 25	15	0.219	1.50	1.6	ELH337M250AS1(1)
250	300	390	22 x 35	15	0.186	1.65	1.9	ELH397M250AQ3(1)
250	300	390	22 x 40	15	0.186	1.65	1.9	ELH397M250AQ4(1)
250	300	390	25 x 35	15	0.186	1.65	1.9	ELH397M250AR3(1)
250	300	390	30 x 25	15	0.186	1.65	1.9	ELH397M250AS1(1)
250	300	470	22 x 40	15	0.155	1.85	2.3	ELH477M250AQ4(1)
250	300	470	22 x 45	15	0.155	1.85	2.3	ELH477M250AQ5(1)
250	300	470	25 x 35	15	0.155	1.85	2.3	ELH477M250AR3(1)
250	300	470	30 x 30	15	0.155	1.90	2.3	ELH477M250AS2(1)
250	300	470	35 x 25	15	0.155	1.90	2.3	ELH477M250AT1(1)
250	300	560	22 x 45	15	0.131	2.10	2.8	ELH567M250AQ5(1)
250	300	560	22 x 50	15	0.131	2.10	2.8	ELH567M250AQ6(1)
250	300	560	25 x 40	15	0.131	2.10	2.8	ELH567M250AR4(1)
250	300	560	30 x 30	15	0.131	2.10	2.8	ELH567M250AS2(1)
250	300	560	30 x 35	15	0.131	2.10	2.8	ELH567M250AS3(1)
VDC	**VDC Surge**	**Rated Capacitance**	**Case Size**	**DF**	**ESR**	**RC**	**LC**	**Part Number**

(1) Insert packaging code. See Ordering Options Table for available options.

** When capacitance exceeds 1,000 µF, the DF value (%) is increased by 2% for every additional 1,000 µF.*

Table 1B – Ratings & Part Number Reference cont'd

VDC	VDC Surge Voltage	Rated Capacitance 120 Hz 20°C (µF)	Case Size D x L (mm)	DF 120 Hz 20°C (tan δ %)*	ESR Maximum 20 kHz 25°C (Ω)	RC 120 Hz 85°C (A)	LC 20°C 5 Minutes (mA)	Part Number
250	300	560	35 x 25	15	0.131	2.10	2.8	ELH567M250AT1(1)
250	300	680	25 x 45	15	0.110	2.45	3.0	ELH687M250AR5(1)
250	300	680	25 x 50	15	0.110	2.45	3.0	ELH687M250AR6(1)
250	300	680	30 x 35	15	0.110	2.45	3.0	ELH687M250AS3(1)
250	300	680	30 x 40	15	0.110	2.45	3.0	ELH687M250AS4(1)
250	300	680	35 x 25	15	0.110	2.45	3.0	ELH687M250AT1(1)
250	300	680	35 x 30	15	0.110	2.45	3.0	ELH687M250AT2(1)
250	300	820	30 x 35	15	0.108	2.75	3.0	ELH827M250AS3(1)
250	300	820	30 x 45	15	0.108	2.75	3.0	ELH827M250AS5(1)
250	300	820	35 x 30	15	0.108	2.75	3.0	ELH827M250AT2(1)
250	300	820	35 x 35	15	0.108	2.75	3.0	ELH827M250AT3(1)
250	300	1000	30 x 45	15	0.093	3.30	3.0	ELH108M250AS5(1)
250	300	1000	30 x 50	15	0.093	3.30	3.0	ELH108M250AS6(1)
250	300	1000	35 x 35	15	0.093	3.30	3.0	ELH108M250AT3(1)
250	300	1000	35 x 40	15	0.093	3.30	3.0	ELH108M250AT4(1)
250	300	1200	35 x 40	15	0.075	3.55	3.0	ELH128M250AT4(1)
250	300	1200	35 x 45	15	0.075	3.55	3.0	ELH128M250AT5(1)
250	300	1500	35 x 45	15	0.072	4.05	3.0	ELH158M250AT5(1)
250	300	1500	35 x 50	15	0.072	4.05	3.0	ELH158M250AT6(1)
350	400	68	22 x 20	15	0.890	0.55	0.5	ELH686M350AQ7(1)
350	400	82	22 x 25	15	0.720	0.65	0.6	ELH826M350AQ1(1)
350	400	82	25 x 20	15	0.720	0.65	0.6	ELH826M350AR7(1)
350	400	100	22 x 30	15	0.595	0.90	0.7	ELH107M350AQ2(1)
350	400	100	25 x 20	15	0.595	0.90	0.7	ELH107M350AR7(1)
350	400	120	22 x 30	15	0.510	1.00	0.8	ELH127M350AQ2(1)
350	400	120	25 x 25	15	0.510	1.00	0.8	ELH127M350AR1(1)
350	400	150	22 x 35	15	0.412	1.15	1.0	ELH157M350AQ3(1)
350	400	150	25 x 30	15	0.412	1.15	1.0	ELH157M350AR2(1)
350	400	150	30 x 25	15	0.412	1.15	1.0	ELH157M350AS1(1)
350	400	180	22 x 40	15	0.343	1.30	1.3	ELH187M350AQ4(1)
350	400	180	25 x 30	15	0.343	1.25	1.3	ELH187M350AR2(1)
350	400	180	30 x 30	15	0.343	1.25	1.3	ELH187M350AS2(1)
350	400	220	22 x 45	15	0.285	1.45	1.5	ELH227M350AQ5(1)
350	400	220	25 x 35	15	0.285	1.45	1.5	ELH227M350AR3(1)
350	400	220	30 x 30	15	0.285	1.45	1.5	ELH227M350AS2(1)
350	400	220	35 x 25	15	0.285	1.45	1.5	ELH227M350AT1(1)
350	400	270	25 x 40	15	0.245	1.65	1.9	ELH277M350AR4(1)
350	400	270	30 x 35	15	0.245	1.65	1.9	ELH277M350AS3(1)
350	400	270	35 x 25	15	0.245	1.65	1.9	ELH277M350AT1(1)
350	400	330	25 x 50	15	0.210	1.80	2.3	ELH337M350AR6(1)
350	400	330	30 x 40	15	0.210	1.80	2.3	ELH337M350AS4(1)
350	400	330	35 x 30	15	0.210	1.80	2.3	ELH337M350AT2(1)
350	400	390	30 x 40	15	0.175	2.00	2.7	ELH397M350AS4(1)
350	400	390	35 x 30	15	0.175	2.00	2.7	ELH397M350AT2(1)
350	400	470	30 x 45	15	0.145	2.25	3.0	ELH477M350AS5(1)
350	400	470	35 x 35	15	0.145	2.25	3.0	ELH477M350AT3(1)
350	400	560	35 x 40	15	0.108	2.50	3.0	ELH567M350AT4(1)
350	400	680	35 x 45	15	0.105	2.90	3.0	ELH687M350AT5(1)
400	450	56	22 x 20	15	1.210	0.55	0.4	ELH556M400AQ7(1)
400	450	68	22 x 25	15	0.852	0.60	0.5	ELH686M400AQ1(1)
400	450	68	25 x 20	15	0.852	0.60	0.5	ELH686M400AR7(1)
400	450	82	22 x 25	15	0.706	0.80	0.6	ELH826M400AQ1(1)
400	450	82	25 x 20	15	0.706	0.80	0.6	ELH826M400AR7(1)
400	450	100	22 x 30	15	0.582	0.90	0.8	ELH107M400AQ2(1)
400	450	100	25 x 25	15	0.582	0.90	0.8	ELH107M400AR1(1)
400	450	120	22 x 35	15	0.485	1.05	1.0	ELH127M400AQ3(1)
400	450	120	25 x 25	15	0.485	1.05	1.0	ELH127M400AR1(1)
VDC	**VDC Surge**	**Rated Capacitance**	**Case Size**	**DF**	**ESR**	**RC**	**LC**	**Part Number**

(1) Insert packaging code. See Ordering Options Table for available options.

** When capacitance exceeds 1,000 µF, the DF value (%) is increased by 2% for every additional 1,000 µF.*

Table 1B – Ratings & Part Number Reference cont'd

VDC	VDC Surge Voltage	Rated Capacitance 120 Hz 20°C (µF)	Case Size D x L (mm)	DF 120 Hz 20°C (tan δ %)*	ESR Maximum 20 kHz 25°C (Ω)	RC 120 Hz 85°C (A)	LC 20°C 5 Minutes (mA)	Part Number
400	450	150	22 x 35	15	0.388	1.15	1.2	ELH157M400AQ3(1)
400	450	150	22 x 40	15	0.388	1.15	1.2	ELH157M400AQ4(1)
400	450	150	25 x 30	15	0.388	1.15	1.2	ELH157M400AR2(1)
400	450	150	30 x 25	15	0.388	1.15	1.2	ELH157M400AS1(1)
400	450	180	22 x 45	15	0.323	1.30	1.4	ELH187M400AQ5(1)
400	450	180	25 x 35	15	0.323	1.30	1.4	ELH187M400AR3(1)
400	450	180	30 x 30	15	0.323	1.35	1.4	ELH187M400AS2(1)
400	450	220	22 x 50	15	0.265	1.50	1.8	ELH227M400AQ6(1)
400	450	220	25 x 40	15	0.265	1.50	1.8	ELH227M400AR4(1)
400	450	220	30 x 30	15	0.265	1.50	1.8	ELH227M400AS2(1)
400	450	220	35 x 25	15	0.265	1.50	1.8	ELH227M400AT1(1)
400	450	270	25 x 40	15	0.242	1.65	2.2	ELH277M400AR4(1)
400	450	270	25 x 45	15	0.242	1.65	2.2	ELH277M400AR5(1)
400	450	270	30 x 35	15	0.242	1.65	2.2	ELH277M400AS3(1)
400	450	270	35 x 30	15	0.242	1.65	2.2	ELH277M400AT2(1)
400	450	330	25 x 50	15	0.195	1.90	2.6	ELH337M400AR6(1)
400	450	330	30 x 40	15	0.195	1.90	2.6	ELH337M400AS4(1)
400	450	330	35 x 30	15	0.195	1.85	2.6	ELH337M400AT2(1)
400	450	390	30 x 45	15	0.165	2.15	3.0	ELH397M400AS5(1)
400	450	390	35 x 35	15	0.165	2.10	3.0	ELH397M400AT3(1)
400	450	470	30 x 50	15	0.130	2.40	3.0	ELH477M400AS6(1)
400	450	470	35 x 40	15	0.130	2.40	3.0	ELH477M400AT4(1)
400	450	560	35 x 45	15	0.115	2.70	3.0	ELH567M400AT5(1)
400	450	680	35 x 50	15	0.095	2.90	3.0	ELH687M400AT6(1)
450	500	47	22x25	20	1.460	0.50	0.4	ELH476M450AQ1(1)
450	500	56	22x25	20	1.230	0.65	0.5	ELH566M450AQ1(1)
450	500	68	22x30	20	0.937	0.70	0.6	ELH686M450AQ2(1)
450	500	68	25x25	20	0.937	0.70	0.6	ELH686M450AR1(1)
450	500	82	22x30	20	0.768	0.80	0.7	ELH826M450AQ2(1)
450	500	82	25x25	20	0.768	0.80	0.7	ELH826M450AR1(1)
450	500	100	22x35	20	0.628	0.95	0.9	ELH107M450AQ3(1)
450	500	100	25x30	20	0.628	0.95	0.9	ELH107M450AR2(1)
450	500	100	30x25	20	0.628	0.95	0.9	ELH107M450AS1(1)
450	500	120	22x40	20	0.532	1.05	1.1	ELH127M450AQ4(1)
450	500	120	25x30	20	0.532	1.05	1.1	ELH127M450AR2(1)
450	500	120	30x25	20	0.532	1.05	1.1	ELH127M450AS1(1)
450	500	150	22x45	20	0.425	1.20	1.3	ELH157M450AQ5(1)
450	500	150	25x35	20	0.425	1.20	1.3	ELH157M450AR3(1)
450	500	150	30x30	20	0.425	1.20	1.3	ELH157M450AS2(1)
450	500	180	25x40	20	0.354	1.35	1.6	ELH187M450AR4(1)
450	500	180	30x35	20	0.354	1.35	1.6	ELH187M450AS3(1)
450	500	180	35x25	20	0.354	1.35	1.6	ELH187M450AT1(1)
450	500	220	25x50	20	0.287	1.55	2.0	ELH227M450AR6(1)
450	500	220	30x40	20	0.287	1.55	2.0	ELH227M450AS4(1)
450	500	220	35x30	20	0.287	1.55	2.0	ELH227M450AT2(1)
450	500	270	30x45	20	0.266	1.75	2.4	ELH277M450AS5(1)
450	500	270	35x35	20	0.266	1.70	2.4	ELH277M450AT3(1)
450	500	330	30x50	20	0.214	2.00	3.0	ELH337M450AS6(1)
450	500	330	35x40	20	0.214	2.00	3.0	ELH337M450AT4(1)
450	500	390	35x45	20	0.180	2.25	3.0	ELH397M450AT5(1)
450	500	470	35x50	20	0.145	2.50	3.0	ELH477M450AT6(1)
450	500	680	35x60	20	0.110	2.90	3.0	ELH687M450AT8(1)
VDC	**VDC Surge**	**Rated Capacitance**	**Case Size**	**DF**	**ESR**	**RC**	**LC**	**Part Number**

(1) Insert packaging code. See Ordering Options Table for available options.

** When capacitance exceeds 1,000 µF, the DF value (%) is increased by 2% for every additional 1,000 µF.*

Mounting Positions (Safety Vent)

In operation, electrolytic capacitors will always conduct a leakage current which causes electrolysis. The oxygen produced by electrolysis will regenerate the dielectric layer but, at the same time, the hydrogen released may cause the internal pressure of the capacitor to increase. The overpressure vent (safety vent) ensures that the gas can escape when the pressure reaches a certain value. All mounting positions must allow the safety vent to work properly.

Installing

- A general principle is that lower-use temperatures result in a longer, useful life of the capacitor. For this reason, it should be ensured that electrolytic capacitors are placed away from heat-emitting components. Adequate space should be allowed between components for cooling air to circulate, particularly when high ripple current loads are applied. In any case, the maximum category temperature must not be exceeded.
- Do not deform the case of capacitors or use capacitors with a deformed case.
- Verify that the connections of the capacitors are able to insert on the board without excessive mechanical force.
- If the capacitors require mounting through additional means, the recommended mounting accessories shall be used.
- Verify the correct polarization of the capacitor on the board.
- Verify that the space around the pressure relief device is according to the following guideline:

Case Diameter	Space Around Safety Vent
≤ 16 mm	> 2 mm
> 16 mm to ≤ 40 mm	> 3 mm
> 40 mm	> 5 mm

It is recommended that capacitors always be mounted with the safety device uppermost or in the upper part of the capacitor.

- If the capacitors are stored for a long time, the leakage current must be verified. If the leakage current is superior to the value listed in this catalog, the capacitors must be reformed. In this case, they can be reformed by application of the rated voltage through a series resistor approximately 1 kΩ for capacitors with V_R ≤ 160 V (5 W resistor) and 10 kΩ for the other rated voltages.
- In the case of capacitors connected in series, a suitable voltage sharing must be used.
  In the case of balancing resistors, the approximate resistance value can be calculated as: R = 60/C

KEMET recommends, nevertheless, to ensure that the voltage across each capacitor does not exceed its rated voltage.

Application and Operation Guidelines

Electrical Ratings:
Capacitance (ESC)

Capacitance is measured by applying an alternate voltage of ≤ 0.5 V at a frequency of 120 or 100 Hz and 20°C.

Temperature Dependence of the Capacitance

Capacitance of an electrolytic capacitor depends upon temperature: with decreasing temperature the viscosity of the electrolyte increases, thereby reducing its conductivity.

Capacitance will decrease if temperature decreases. Furthermore, temperature drifts cause armature dilatation and, therefore, capacitance changes (up to 20% depending on the series considered, from 0 to 80°C). This phenomenon is more evident for electrolytic capacitors than for other types.

Frequency Dependence of the Capacitance

Effective capacitance value is derived from the impedance curve, as long as impedance is still in the range where the capacitance component is dominant.

$$C = \frac{1}{2\pi fZ}$$

C = Capacitance (F)
f = Frequency (Hz)
Z = Impedance (Ω)

Dissipation Factor tan δ (DF)

Dissipation Factor tan δ is the ratio between the active and reactive power for a sinusoidal waveform voltage. It can be thought of as a measurement of the gap between an actual and ideal capacitor.

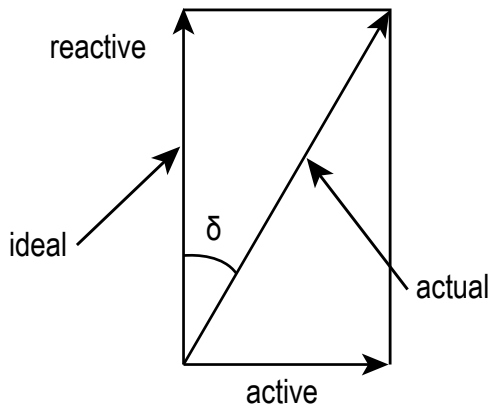

Tan δ is measured with the same set-up used for the series capacitance ESC.
tan δ = ω x ESC x ESR where:
ESC = Equivalent Series Capacitance
ESR = Equivalent Series Resistance

Equivalent Series Inductance (ESL)

Self inductance or Equivalent Series Inductance results from the terminal configuration and internal design of the capacitor.

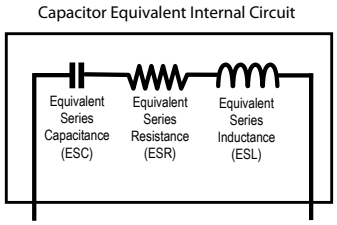

Equivalent Series Resistance (ESR)

Equivalent Series Resistance is the resistive component of the equivalent series circuit. ESR value depends on frequency and temperature and is related to the tan δ by the following equation:

$$ESR = \frac{\tan \delta}{2\pi f\, ESC}$$

ESR = Equivalent Series Resistance (Ω)
tan δ = Dissipation Factor
ESC = Equivalent Series Capacitance (F)
f = Frequency (Hz)

Tolerance limits of the rated capacitance must be taken into account when calculating this value.

Impedance (Z)

Impedance of an electrolytic capacitor results from a circuit formed by the following individual equivalent series components:

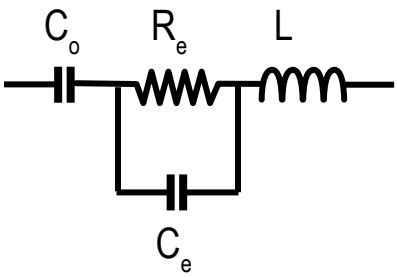

C_o = Aluminum oxide capacitance (surface and thickness of the dielectric)
R_e = Resistance of electrolyte and paper mixture (other resistances not depending on the frequency are not considered: tabs, plates, etc.)
C_e = Electrolyte soaked paper capacitance
L = Inductive reactance of the capacitor winding and terminals
Impedance of an electrolytic capacitor is not a constant quantity that retains its value under all conditions; it changes depending on frequency and temperature.

Impedance as a function of frequency (sinusoidal waveform) for a certain temperature can be represented as follows:

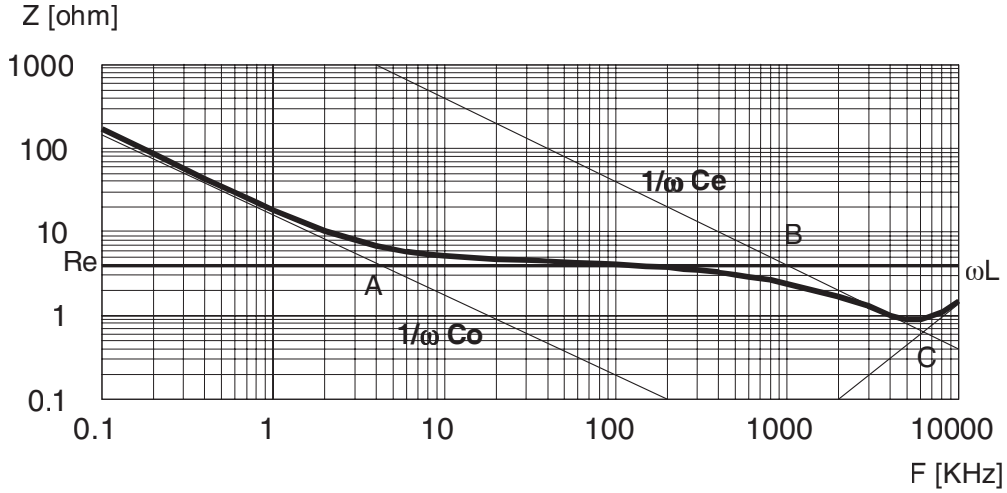

- Capacitive reactance predominates at low frequencies
- With increasing frequency, capacitive reactance $Xc = 1/\omega C_o$ decreases until it reaches the order of magnitude of electrolyte resistance $R_e(A)$
- At even higher frequencies, resistance of the electrolyte predominates: $Z = R_e (A - B)$
- When the capacitor's resonance frequency is reached (ω_0), capacitive and inductive reactance mutually cancel each other $1/\omega C_e = \omega L$, $\omega_0 = C\sqrt{1/LCe}$
- Above this frequency, inductive reactance of the winding and its terminals ($XL = Z = \omega L$) becomes effective and leads to an increase in impedance

Generally speaking, it can be estimated that $C_e \approx 0.01\ C_o$.
Impedance as a function of frequency (sinusoidal waveform) for different temperature values can be represented as follows (typical values):

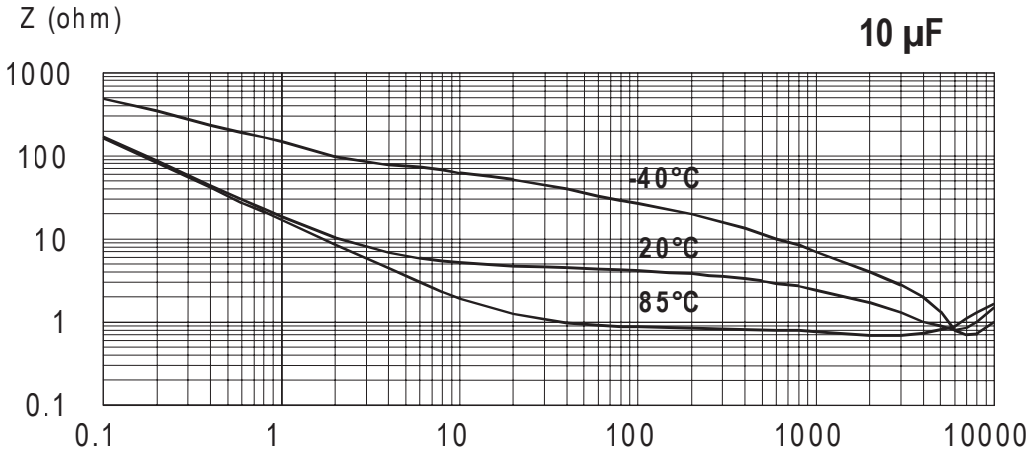

R_e is the most temperature-dependent component of an electrolytic capacitor equivalent circuit. Electrolyte resistivity will decrease if temperature rises.

In order to obtain a low impedance value throughout the temperature range, R_e must be as little as possible. However, R_e values that are too low indicate a very aggressive electrolyte, resulting in a shorter life of the electrolytic capacitor at high temperatures. A compromise must be reached.

Leakage Current (LC)

Due to the aluminum oxide layer that serves as a dielectric, a small current will continue to flow even after a DC voltage has been applied for long periods. This current is called leakage current.

A high leakage current flows after applying voltage to the capacitor then decreases in a few minutes, e.g., after prolonged storage without any applied voltage. In the course of continuous operation, the leakage current will decrease and reach an almost constant value.

After a voltage-free storage the oxide layer may deteriorate, especially at high temperature. Since there are no leakage currents to transport oxygen ions to the anode, the oxide layer is not regenerated. The result is that a higher than normal leakage current will flow when voltage is applied after prolonged storage.

As the oxide layer is regenerated in use, the leakage current will gradually decrease to its normal level.

The relationship between the leakage current and voltage applied at constant temperature can be shown schematically as follows:

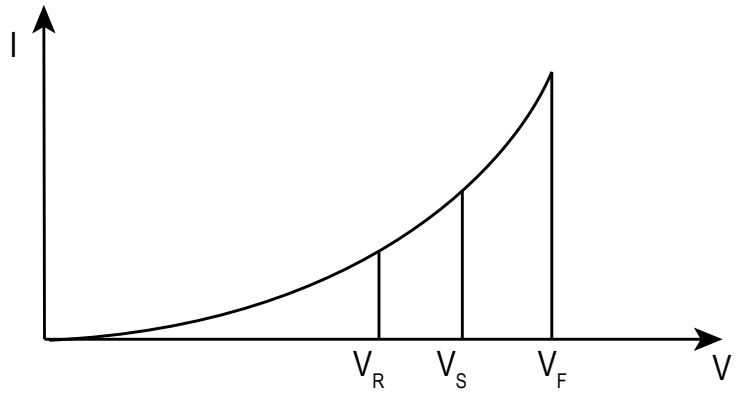

Where:
V_F = **Forming voltage**
If this level is exceeded, a large quantity of heat and gas will be generated and the capacitor could be damaged.
V_R = **Rated voltage**
This level represents the top of the linear part of the curve.
V_S = **Surge voltage**
This lies between V_R and V_F. The capacitor can be subjected to V_S for short periods only.

Electrolytic capacitors are subjected to a reforming process before acceptance testing. The purpose of this preconditioning is to ensure that the same initial conditions are maintained when comparing different products.

Ripple Current (RC)

The maximum ripple current value depends on:
- Ambient temperature
- Surface area of the capacitor (heat dissipation area)
tan δ or ESR
- Frequency

The capacitor's life depends on the thermal stress.

Frequency Dependence of the Ripple Current

ESR and, thus, the tan δ depend on the frequency of the applied voltage. This indicates that the allowed ripple current is also a function of the frequency.

Temperature Dependence of the Ripple Current

The data sheet specifies maximum ripple current at the upper category temperature for each capacitor.

Expected Life Calculation

Expected life depends on operating temperature according to the following formula: $L = Lo \times 2^{(To-T)/10}$

Where:

L: Expected life

Lo: Load life at maximum permissible operating temperature

T: Actual operating temperature

To: Maximum permissible operating temperature

This formula is applicable between 40°C and To.

Packaging Quantities

Size Code	Diameter (mm)	Length (mm)	Bulk Standard Leads
Q7	22	20	400
Q1	22	25	400
Q2	22	30	400
Q3	22	35	400
Q4	22	40	400
Q5	22	45	400
Q6	22	50	400
R7	25	20	200
R1	25	25	200
R2	25	30	200
R3	25	35	200
R4	25	40	200
R5	25	45	200
R6	25	50	200

Size Code	Diameter (mm)	Length (mm)	Bulk Standard Leads
S1	30	25	200
S2	30	30	200
S3	30	35	200
S4	30	40	200
S5	30	45	200
S6	30	50	200
T1	35	25	200
T2	35	30	200
T3	35	35	200
T4	35	40	200
T5	35	45	200
T6	35	50	200
T8	35	60	200

Standard Marking for Surface Mount Types

- KEMET logo
- Series
- Operating temperature (°C)
- Rated voltage (VDC)
- Rated capacitance (µF)
- Negative polarity: white line
- Date code

Construction

The manufacturing process begins with the anode foil being electrochemically etched to increase the surface area and then "formed" to produce the aluminum oxide layer. Both the anode and cathode foils are then interleaved with absorbent paper and wound into a cylinder. During the winding process, aluminum tabs are attached to each foil to provide the electrical contact.

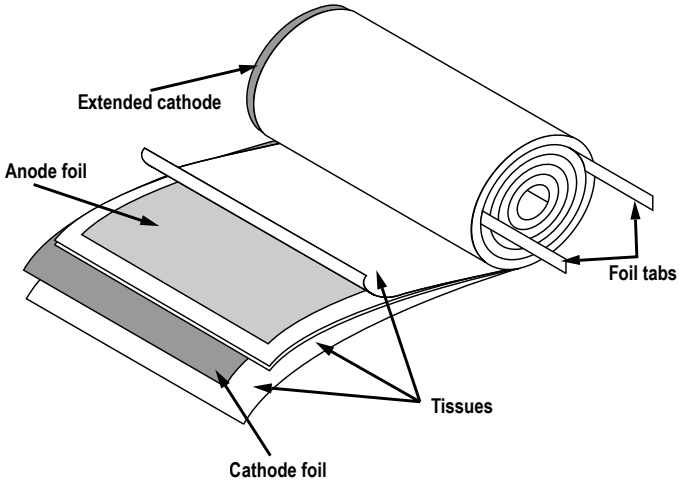

The deck, complete with terminals, is attached to the tabs and then folded down to rest on top of the winding. The complete winding is impregnated with electrolyte before being housed in a suitable container, usually an aluminum can, and sealed. Throughout the process, all materials inside the housing must be maintained at the highest purity and be compatible with the electrolyte.

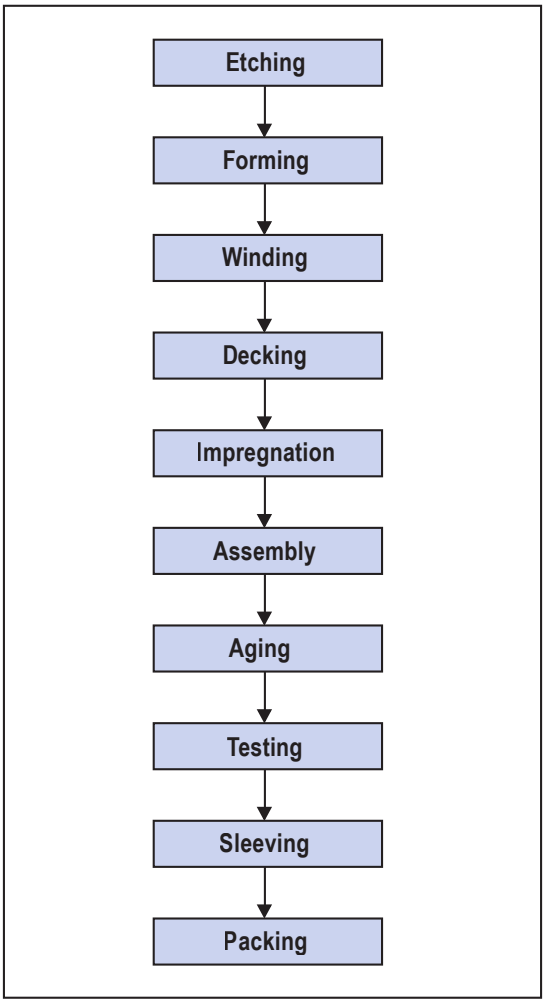

Each capacitor is aged and tested before being sleeved and packed. The purpose of aging is to repair any damage in the oxide layer and thus reduce the leakage current to a very low level. Aging is normally carried out at the rated temperature of the capacitor and is accomplished by applying voltage to the device while carefully controlling the supply current. The process may take several hours to complete.

Damage to the oxide layer can occur due to variety of reasons:

- Slitting of the anode foil after forming
- Attaching the tabs to the anode foil
- Minor mechanical damage caused during winding

A sample from each batch is taken by the quality department after completion of the production process.

The following tests are applied and may be varied at the request of the customer. In this case the batch, or special procedure, will determine the course of action.

Electrical:

- Leakage current
- Capacitance
- ESR
- Impedance
- Tan Delta

Mechanical/Visual:

- Overall dimensions
- Torque test of mounting stud
- Print detail
- Box labels
- Packaging, including packed quantity

KEMET Corporation World Headquarters

2835 KEMET Way
Simpsonville, SC 29681

Mailing Address:
P.O. Box 5928
Greenville, SC 29606

www.kemet.com
Tel: 864-963-6300
Fax: 864-963-6521

Corporate Offices
Fort Lauderdale, FL
Tel: 954-766-2800

North America

Southeast
Lake Mary, FL
Tel: 407-855-8886

Northeast
Wilmington, MA
Tel: 978-658-1663

Central
Novi, MI
Tel: 248-306-9353

West
Milpitas, CA
Tel: 408-433-9950

Mexico
Guadalajara, Jalisco
Tel: 52-33-3123-2141

Europe

Southern Europe
Paris, France
Tel: 33-1-4646-1006

Sasso Marconi, Italy
Tel: 39-051-939111

Central Europe
Landsberg, Germany
Tel: 49-8191-3350800

Kamen, Germany
Tel: 49-2307-438110

Northern Europe
Bishop's Stortford, United Kingdom
Tel: 44-1279-460122

Espoo, Finland
Tel: 358-9-5406-5000

Asia

Northeast Asia
Hong Kong
Tel: 852-2305-1168

Shenzhen, China
Tel: 86-755-2518-1306

Beijing, China
Tel: 86-10-5829-1711

Shanghai, China
Tel: 86-21-6447-0707

Taipei, Taiwan
Tel: 886-2-27528585

Southeast Asia
Singapore
Tel: 65-6586-1900

Penang, Malaysia
Tel: 60-4-6430200

Bangalore, India
Tel: 91-806-53-76817

Note: KEMET reserves the right to modify minor details of internal and external construction at any time in the interest of product improvement. KEMET does not assume any responsibility for infringement that might result from the use of KEMET Capacitors in potential circuit designs. KEMET is a registered trademark of KEMET Electronics Corporation.

Disclaimer

All product specifications, statements, information and data (collectively, the "Information") in this datasheet are subject to change. The customer is responsible for checking and verifying the extent to which the Information contained in this publication is applicable to an order at the time the order is placed.

All Information given herein is believed to be accurate and reliable, but it is presented without guarantee, warranty, or responsibility of any kind, expressed or implied.

Statements of suitability for certain applications are based on KEMET Electronics Corporation's ("KEMET") knowledge of typical operating conditions for such applications, but are not intended to constitute – and KEMET specifically disclaims – any warranty concerning suitability for a specific customer application or use. The Information is intended for use only by customers who have the requisite experience and capability to determine the correct products for their application. Any technical advice inferred from this Information or otherwise provided by KEMET with reference to the use of KEMET's products is given gratis, and KEMET assumes no obligation or liability for the advice given or results obtained.

Although KEMET designs and manufactures its products to the most stringent quality and safety standards, given the current state of the art, isolated component failures may still occur. Accordingly, customer applications which require a high degree of reliability or safety should employ suitable designs or other safeguards (such as installation of protective circuitry or redundancies) in order to ensure that the failure of an electrical component does not result in a risk of personal injury or property damage.

Although all product–related warnings, cautions and notes must be observed, the customer should not assume that all safety measures are indicted or that other measures may not be required.