BASIC PART NUMBER: 83808- X X X X X X X

CARD TYPE: I	1
CARD TYPE: II	2
I/O: CLOSED WITH GROUND CONTACT	0
I/O: 1 CONNECTOR	1
I/O: 2 CONNECTORS	2
LABEL RECESS: NO	0
LABEL RECESS: YES	1
INSULATOR: NO	0
INSULATOR: YES	1
CARDBUS: NO	0
CARDBUS: YES	1
PACKAGING: 1000Pcs/BOX	Blank
PACKAGING: 200Pcs/BOX	S
ALL PART NUMBER: RoHS COMPLIANT SPECIFICATION	Blank LF

83808-XXXXXX IS SIMILAR TO 83808-XXXXXXLF, THE SUFFIX "LF" IS ADDED FOR LEAD FREE IDENTIFICATION

THIS PRODUCT MEETS EUROPEAN UNION DIRECTIVES AND OTHER COUNTRY REGULATIONS AS PER GS-22-008. PACKAGING SPECIFICATION GS-14-920

PROPERTIES:

CARD SHIELD: STAINLESS STEEL, THICKNESS 0.2mm
SURFACE FINISH: MATTE
FRAME BAR: PPO, COLOR BLACK, UL94V-0
INSULATOR: DIELECTRIC STRENGTH 2500V

mat'l. code				surface ISO 1302	tolerance ISO 406 ISO 1101	projection	product family PCMCIA
ltr	ecn no	dr	date	tolerances unless otherwise specified			title ROCARD SHIELD
H	F10514	DLE	01.09.07	angles	linear	mm	
J	F05-0254	DLE	05.09.26				
K	F06-0138	DLE	06.02.27			scale 1:1	
L	F06-0138	DLE	06.02.27	dr	D LEGRAND	01.09.07	dwg no 83808 sheet 1 of 10 size A4
M	F06-0248	DLE	06.07.28	engr	F HAUTIER	99.04.29	
				chr	D LEGRAND	99.04.29	
G	F00439	DLE	00.06.19	appd	F HAUTIER	99.04.29	type CUSTOMER Drawing

sheet index	revision	M	G	G	G	G	G	F	F	F	F
	sheet	1	2	3	4	5	6	7	8	9	10

form: A4

Copyright FCI

FCIconnect.com

Product number	Insulator	Label recess
83808-21000LF	no	no
83808-21010LF	yes	no
83808-21100LF	no	yes
83808-21110LF	yes	yes

Product number	Packaging
83808-xxxxxLF	1000 Rocard Shield/Box
83808-xxxxxSLF	200 Rocard Shield/Box

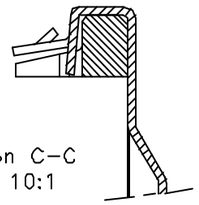

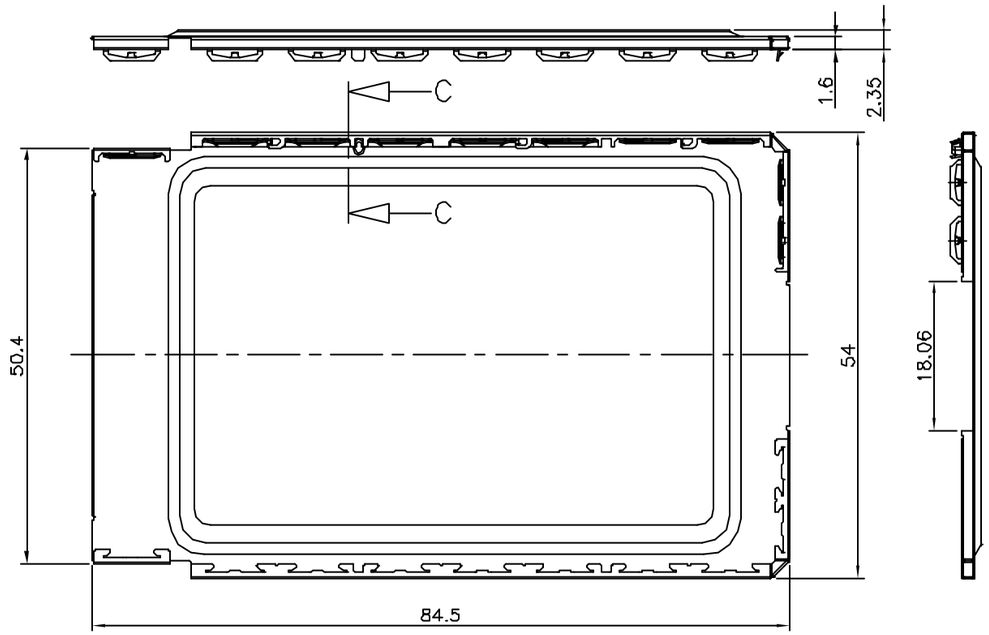

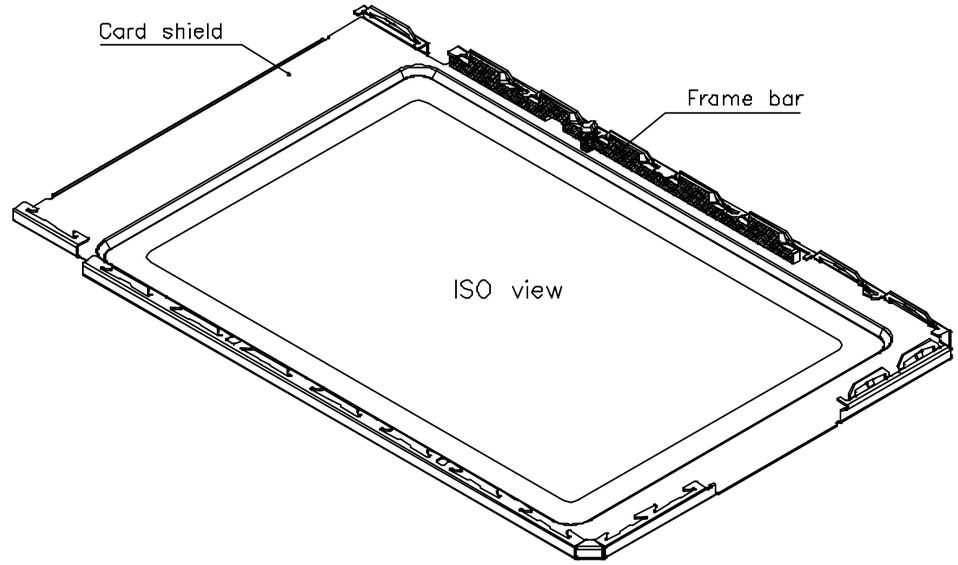

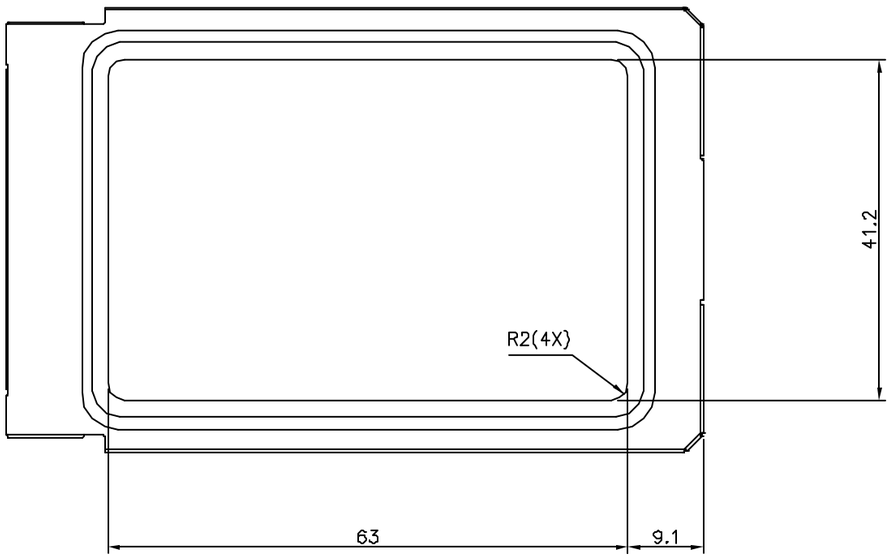

Version: Label recess

(maximum label thickness 0.07 mm)

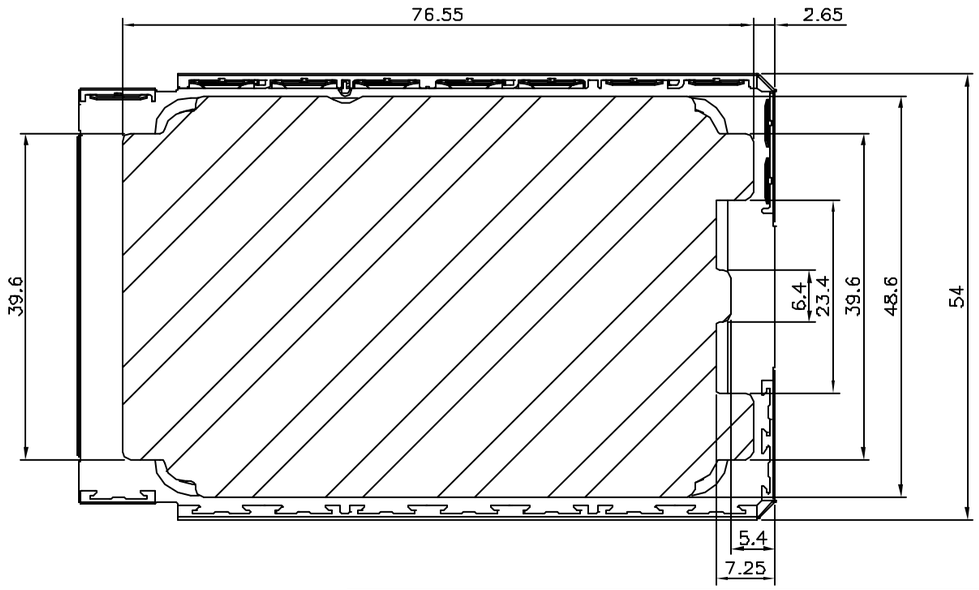

Version: Insulator

(thickness 0.07 mm)

mat'l code				surface ISO 1302 ✓	tolerance ISO 406 ISO 1101	projection
				tolerances unless otherwise specified		
ltr	ecn no	dr	date	angles	linear	mm
A	HB0049	GCA	98.02.12			
B	F80195	GCA	98.04.08			
C	F90323	DLE	99.05.04			scale 2:1
D	F10514	DLE	01.09.07	dr	H VEREMKEN 98.02.12	
E	F05-0254	DLE	05.09.26	engr	F HAUTIER 99.05.04	
F	F06-0136	DLE	06.02.27	chr	D LEGRAND 99.05.04	
G	F06-0248	DLE	06.07.28	appd	F HAUTIER 99.05.04	
sheet index	revision sheet					

product family: PCMCIA

title: ROCARD SHIELD TYPE II, 1x1/0

dwg no: 83808 — sheet 2 of — — size A2

type: CUSTOMER Drawing

Copyright FCI
FCIconnect.com
form: A2

Product number	Insulator	Label recess
83808-22000LF	no	no
83808-22010LF	yes	no
83808-22100LF	no	yes
83808-22110LF	yes	yes

Product number	Packaging
83808-xxxxxLF	1000 Rocard Shield/Box
83808-xxxxxSLF	200 Rocard Shield/Box

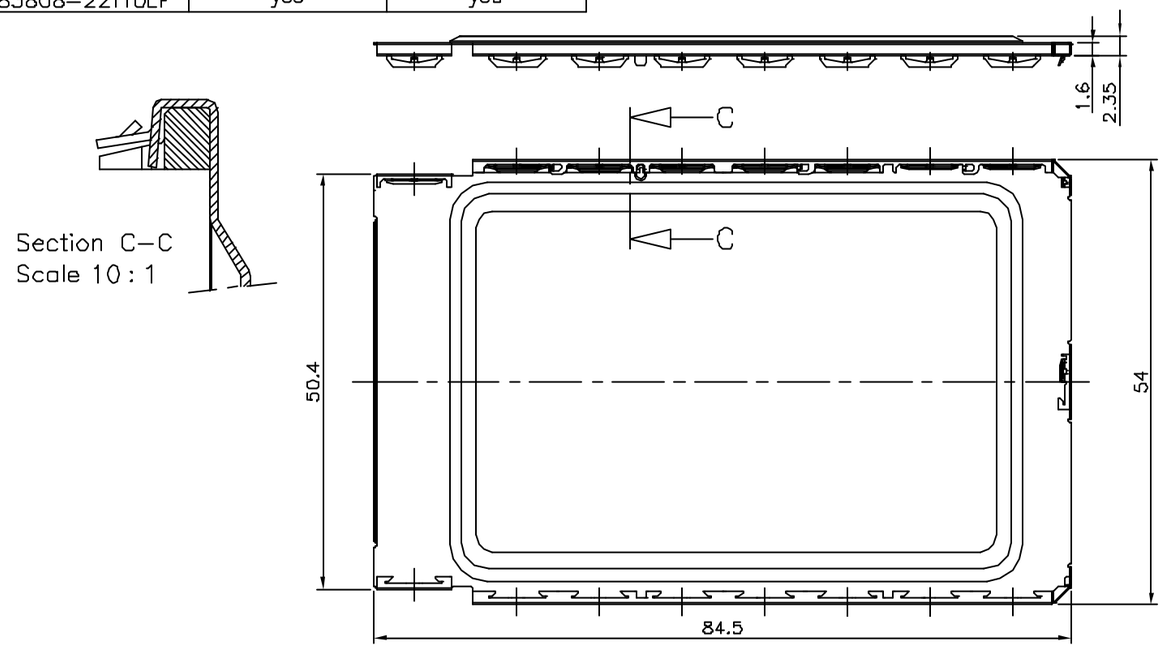

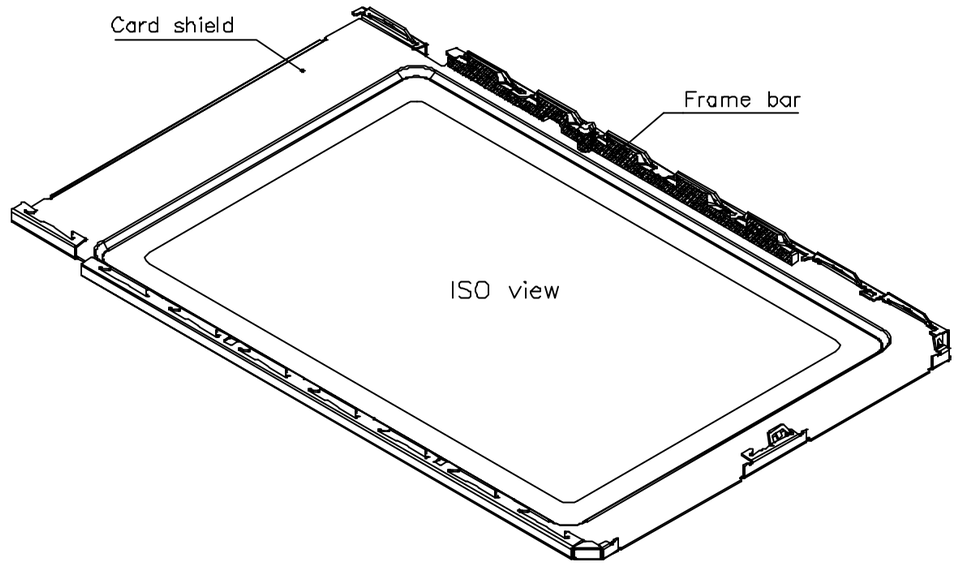

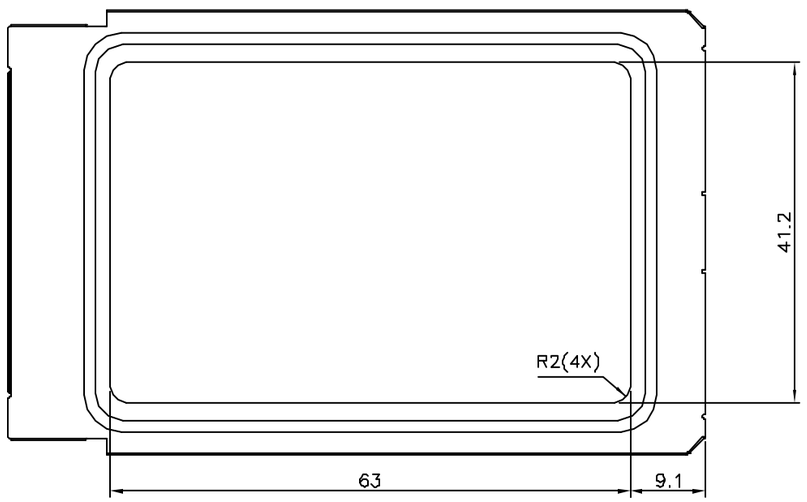

Version: Label recess

(maximum label thickness 0.07 mm)

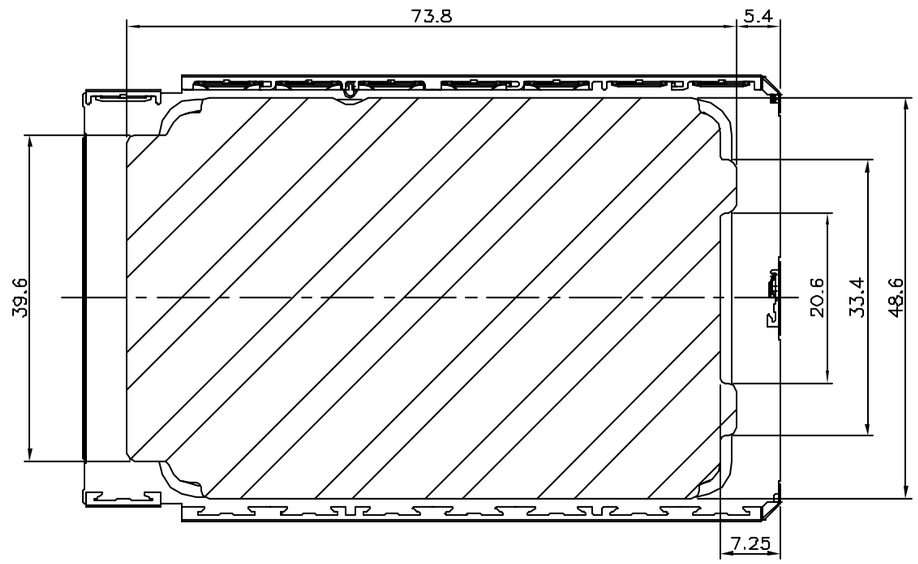

Version: Insulator

(thickness 0.07 mm)

mat'l code				surface ISO 1302	tolerance ISO 406 ISO 1101	projection
				tolerances unless otherwise specified		
ltr	ecn no	dr	date	angles	linear	mm
A	HB0049	GCA	98.02.12			
B	F80195	GCA	98.04.08			
C	F90323	DLE	99.05.04			scale 2:1
D	F10514	DLE	01.09.07	dr	H VEREUKEN	98.02.12
E	F05-0254	DLE	05.09.26	engr	F HAUTIER	99.05.04
F	F06-0138	DLE	06.02.27	chr	D LEGRAND	99.05.04
G	F06-0248	DLE	06.07.28	appd	F HAUTIER	99.05.04
sheet index	revision					
	sheet					

product family: PCMCIA

title: ROCARD SHIELD TYPE II, 2x1/0

dwg no: 83808 — sheet 3 of – — size A2

type: CUSTOMER Drawing

Copyright FCI

Product number	Insulator	Label recess
83808-20000LF	no	no
83808-20010LF	yes	no
83808-20100LF	no	yes
83808-20110LF	yes	yes

Product number	Packaging
83808-xxxxxLF	1000 Rocard Shield/Box
83808-xxxxxSLF	200 Rocard Shield/Box

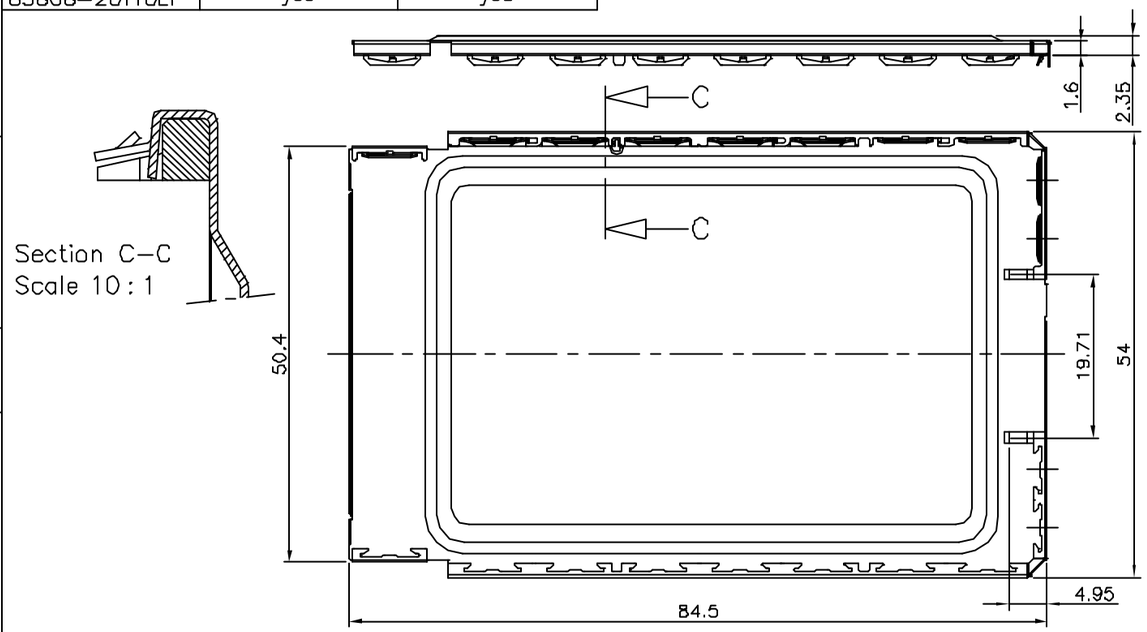

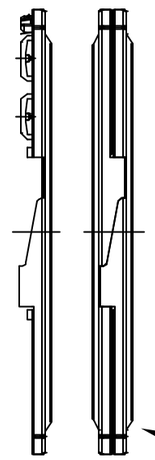

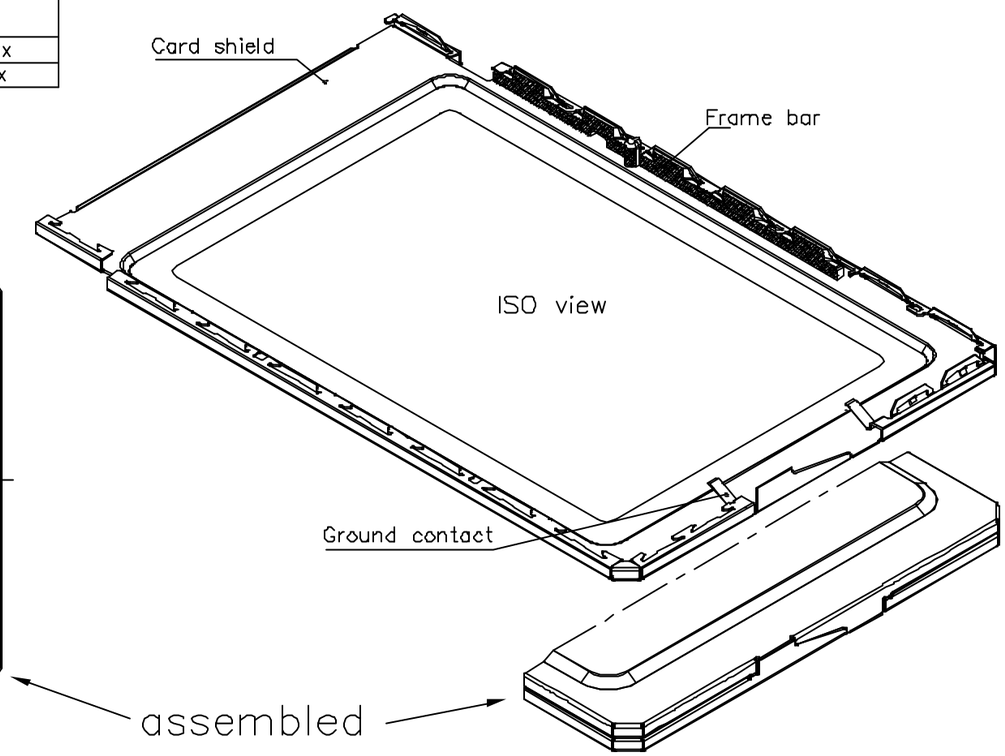

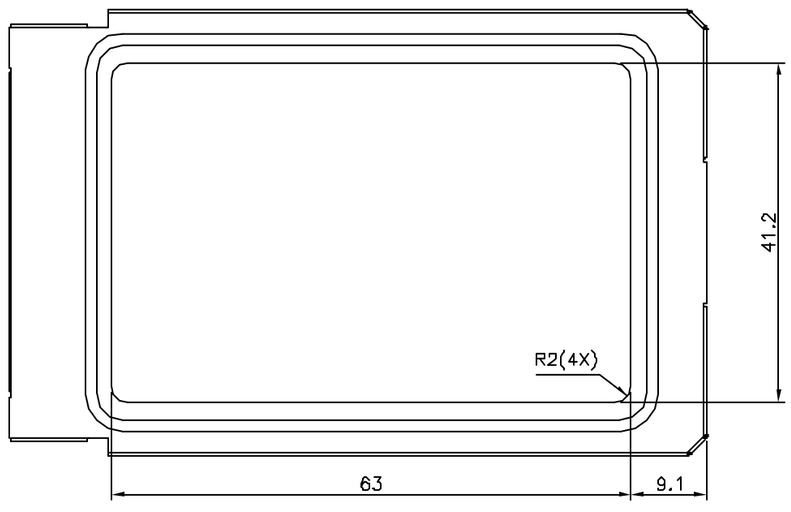

Version: Label recess

(maximum label thickness 0.07 mm)

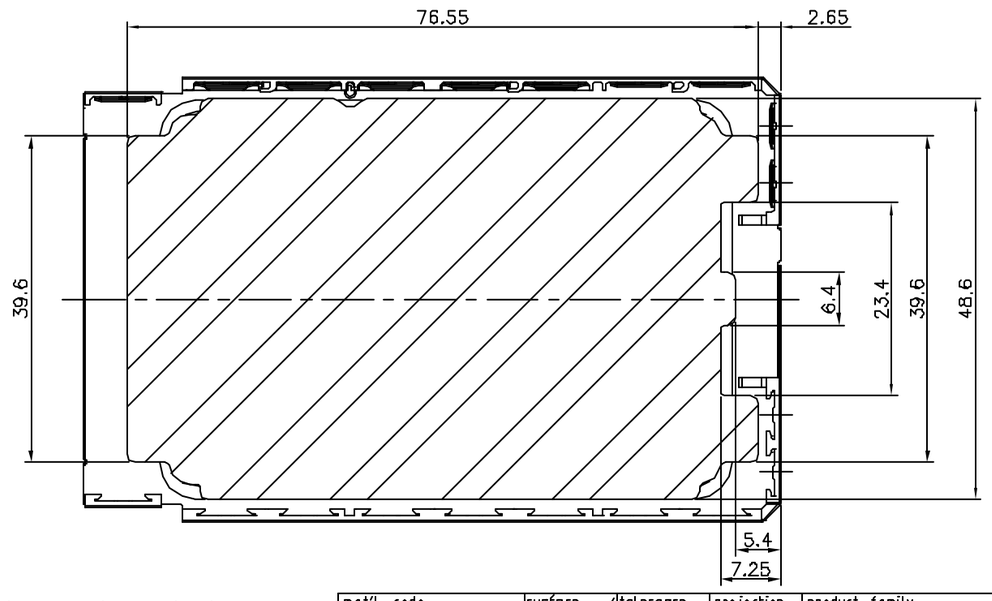

Version: Insulator

(thickness 0.07 mm)

mat'l code				surface ISO 1302 ✓	tolerance ISO 406 ISO 1101	projection	product family PCMCIA
ltr	ecn no	dr	date	tolerances unless otherwise specified			title
A	HB0049	GCA	98.02.12	angles	linear	mm	ROCARD SHIELD
B	FB0195	GCA	98.04.08				TYPE II, CLOSED END
C	F90323	DLE	99.05.04			scale 2:1	
D	F10514	DLE	01.09.07	dr	H VEREEUKEN 98.02.12		dwg no 83808
E	F06-0254	DLE	05.09.26	engr	F HAUTIER 99.05.04		sheet 4 of –
F	F06-0136	DLE	06.02.27	chr	D LEGRAND 99.05.04		size A2
G	F06-0248	DLE	06.07.28	appd	F HAUTIER 99.05.04		type CUSTOMER Drawing
sheet index	revision sheet						

FCIconnect.com
Copyright FCI

form: A2

PDM: Rev:M STATUS:Released Printed: Oct 01, 2010

Product number	Insulator	Label recess
83808-21001LF	no	no
83808-21011LF	yes	no
83808-21101LF	no	yes
83808-21111LF	yes	yes

Product number	Packaging
83808-xxxxxLF	1000 Rocard Shield/Box
83808-xxxxxSLF	200 Rocard Shield/Box

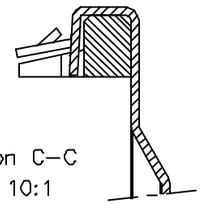

Section C-C
Scale 10:1

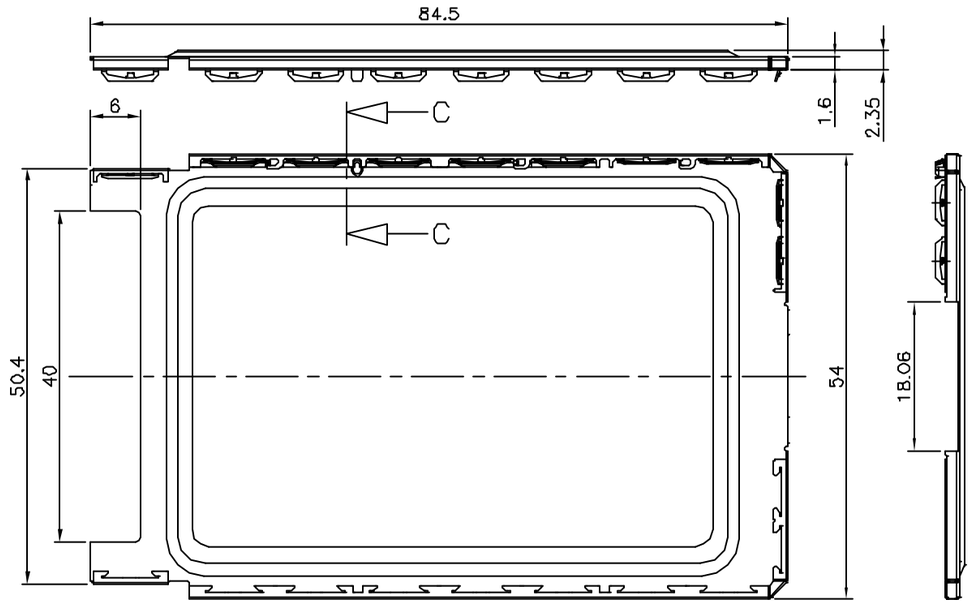

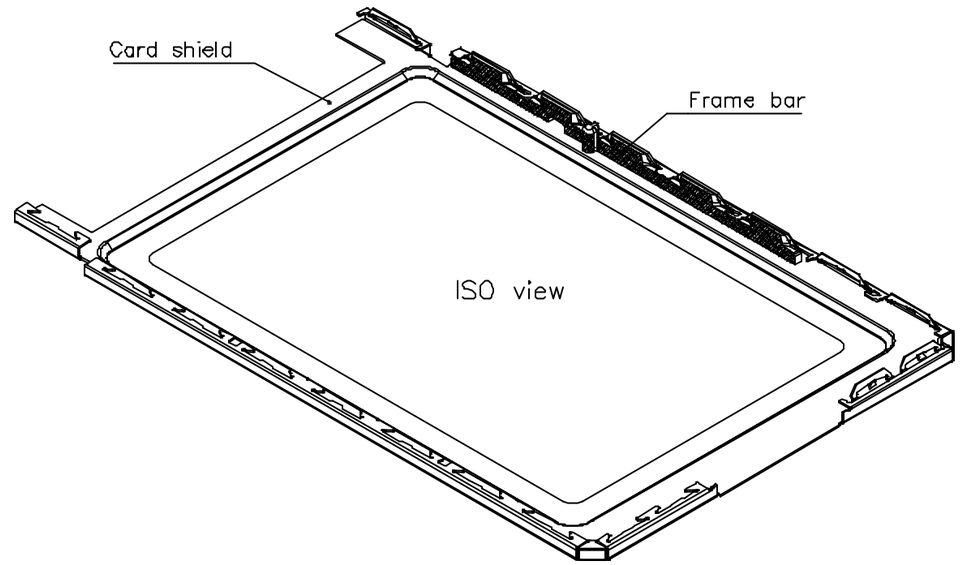

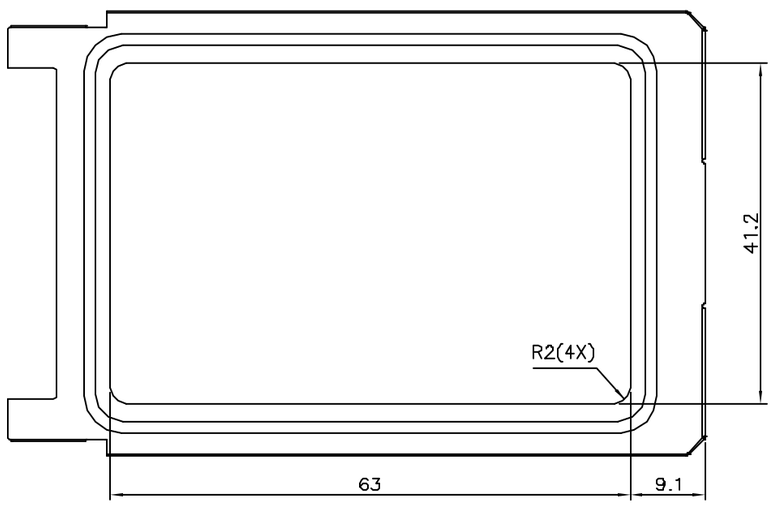

Version: Label recess
(maximum label thickness 0.07 mm)

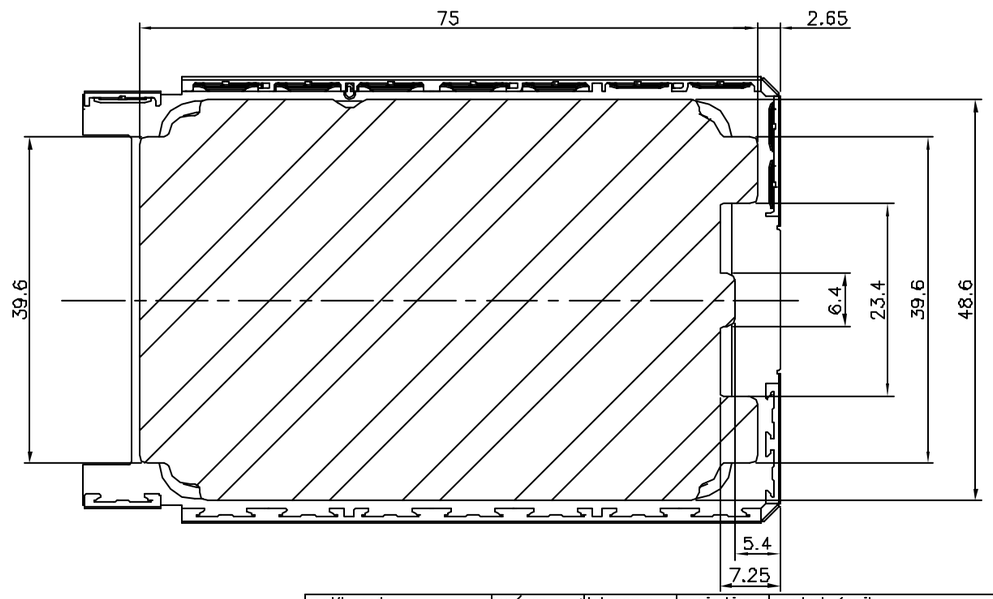

Version: Insulator
(thickness 0.07 mm)

ltr	ecn no	dr	date
A	HB0049	GCA	98.02.12
B	F80195	GCA	98.04.08
C	F90323	DLE	99.05.04
D	F10514	DLE	01.09.07
E	F05-0254	DLE	05.09.26
F	F06-0136	DLE	06.02.27
G	F06-0248	DLE	06.07.28

mat'l code
surface ISO 1302
tolerance ISO 406 ISO 1101
tolerances unless otherwise specified
angles
linear
projection
mm
scale 2:1

dr	H VEREEUKEN	98.02.12
engr	F HAUTIER	99.05.04
chr	D LEGRAND	99.05.04
appd	F HAUTIER	99.05.04

product family: PCMCIA
title: ROCARD SHIELD TYPEII,1xI/O,CARDBUS
dwg no: 83808
sheet 5 of –
size: A2
type: CUSTOMER Drawing
sheet index
revision sheet

Copyright FCI
FCIconnect.com

form: A2

PDM: Rev:M STATUS:Released Printed: Oct 01, 2010

Product number	Insulator	Label recess
83808-22001LF	no	no
83808-22011LF	yes	no
83808-22101LF	no	yes
83808-22111LF	yes	yes

Product number	Packaging
83808-xxxxxLF	1000 Rocard Shield/Box
83808-xxxxxSLF	200 Rocard Shield/Box

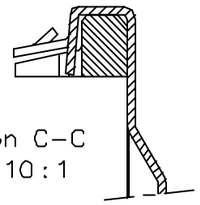

Section C-C
Scale 10 : 1

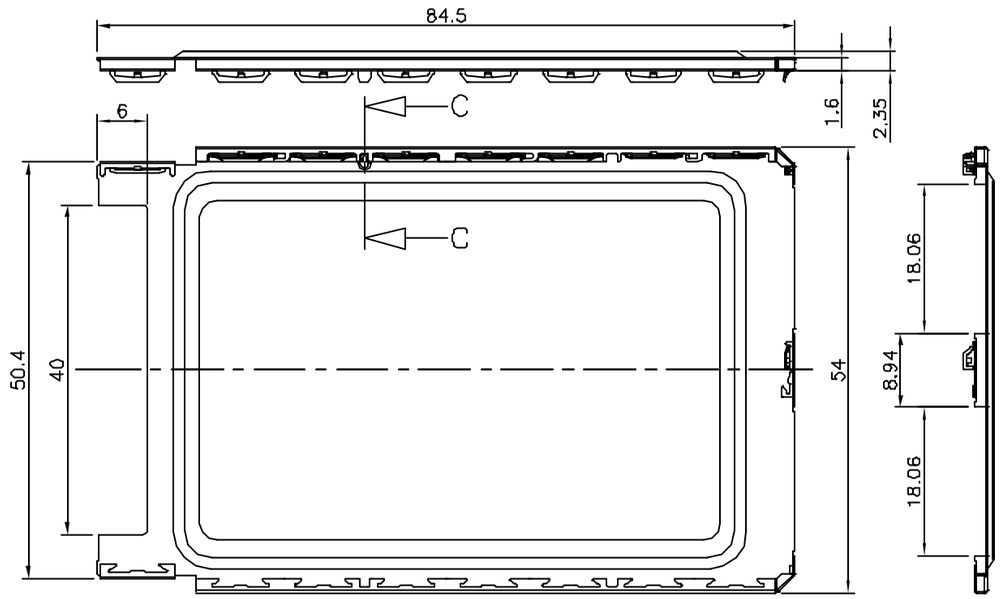

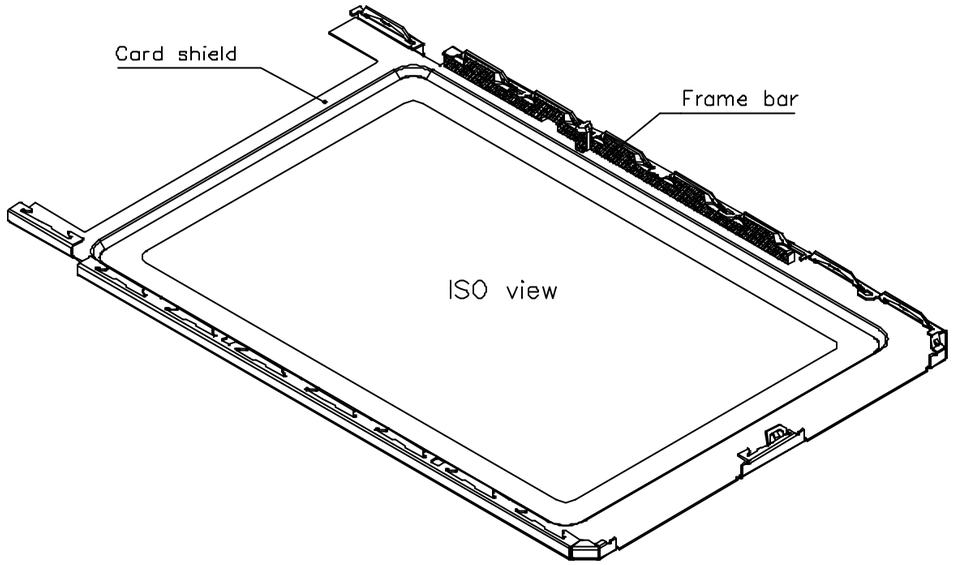

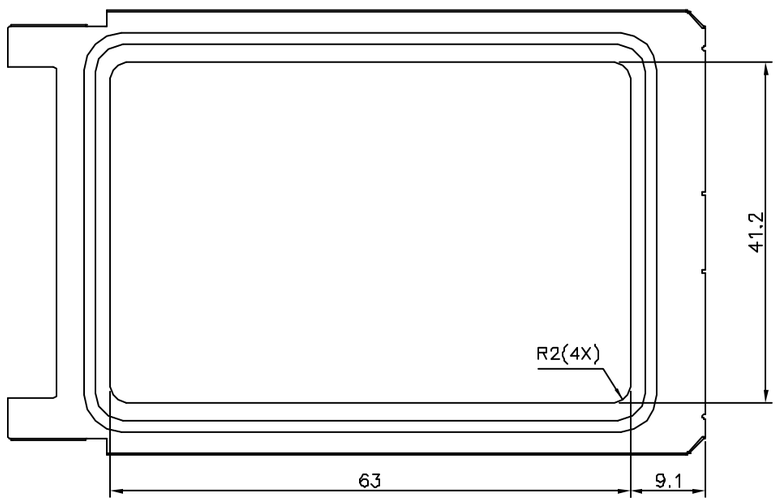

Version: Label recess

(maximum label thickness 0.07 mm)

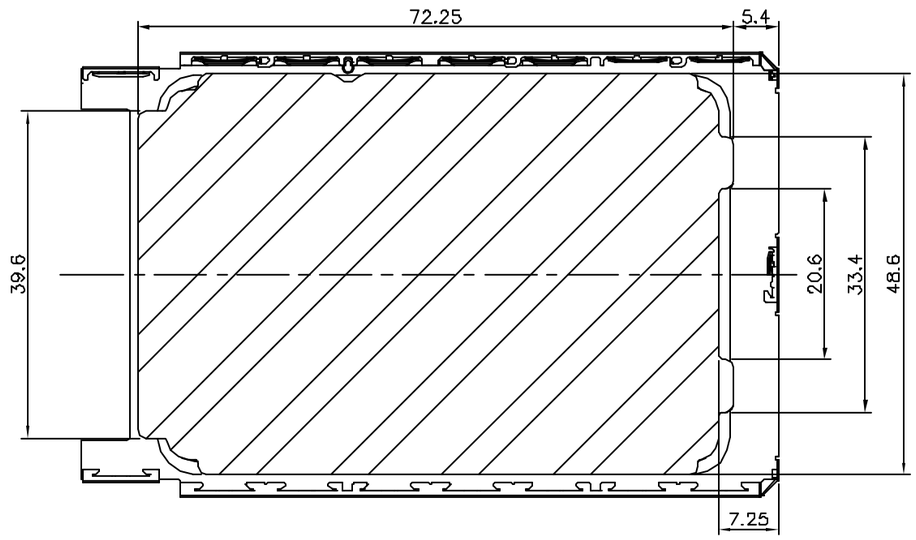

Version: Insulator

(thickness 0.07 mm)

mat'l code				surface ISO 1302	tolerance ISO 406 ISO 1101	projection
				tolerances unless otherwise specified		
ltr	ecn no	dr	date	angles	linear	mm
A	HB0049	GCA	98.02.12			
B	F80195	GCA	98.04.08			
C	F90323	DLE	99.05.04			scale 2:1
D	F10514	DLE	01.09.07	dr	H VEREUKEN 98.02.12	
E	F05-0254	DLE	05.09.26	engr	F HAUTIER 99.05.04	
F	F06-0138	DLE	06.02.27	chr	D LEGRAND 99.05.04	
G	F06-0248	DLE	06.07.28	appd	F HAUTIER 99.05.04	
sheet index	revision					
	sheet					

product family: PCMCIA

title: ROCARD SHIELD TYPE II,2xI/O,CARDBUS

dwg no: 83808 sheet 6 of - size A2

type: CUSTOMER Drawing

Copyright FCI
FCIconnect.com

form: A2

PDM: Rev:M STATUS:Released Printed: Oct 01, 2010

Product number	Insulator
83808-11000LF	no
83808-11010LF	yes

Product number	Packaging
83808-xxxxxLF	1000 Rocard Shield/Box
83808-xxxxxSLF	200 Rocard Shield/Box

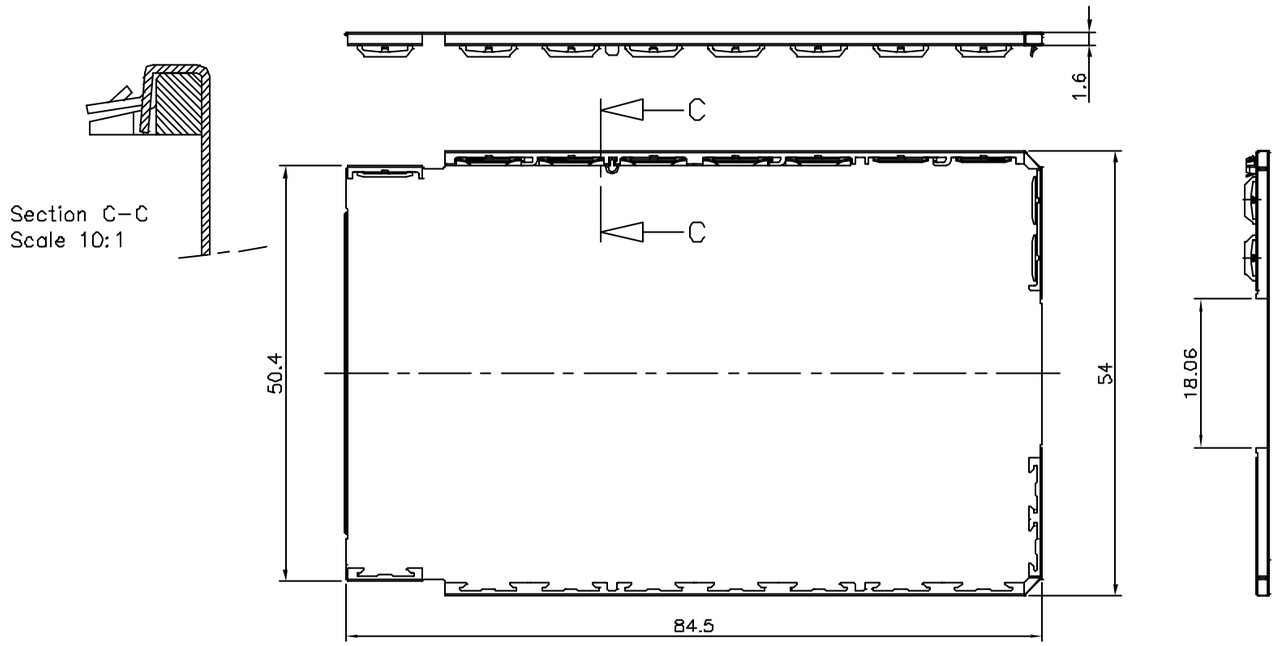

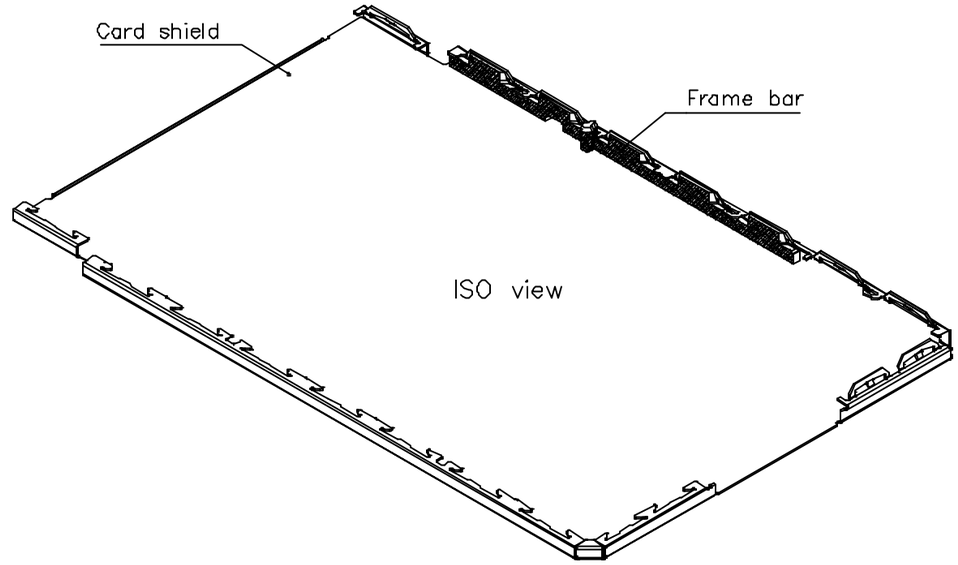

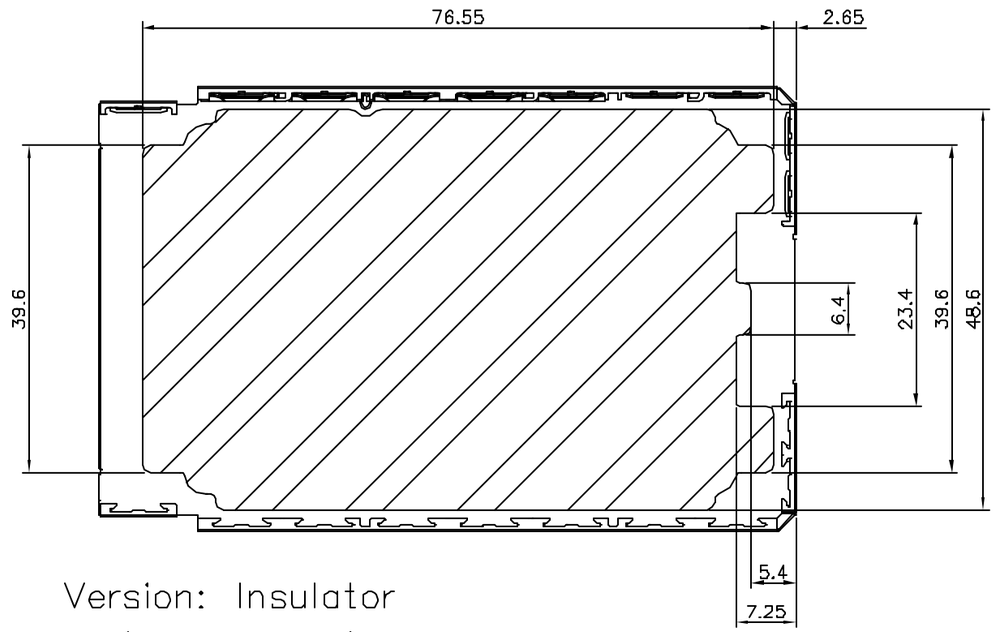

Version: Insulator

(thickness 0.07 mm)

mat'l code				surface ISO 1302	tolerance ISO 406 ISO 1101	projection
				tolerances unless otherwise specified		
ltr	ecn no	dr	date	angles	linear	mm
A	F80195	GCA	98.04.08			
B	F90323	DLE	99.05.04			
C	F10514	DLE	01.09.07			scale 2:1
D	F05-0254	DLE	05.09.26	dr	H VEREUKEN 98.02.12	
E	F06-0136	DLE	06.02.27	engr	F HAUTIER 99.05.04	
F	F06-0248	DLE	06.07.28	chr	D LEGRAND 99.05.04	
				appd	F HAUTIER 99.05.04	

sheet index | revision sheet

product family: PCMCIA

title: ROCARD SHIELD TYPE I, 1x1/O

dwg no: 83808 | sheet 7 of – | size A2

type: CUSTOMER Drawing

FCIconnect.com
Copyright FCI
form: A2

Product number	Insulator
83808-12000LF	no
83808-12010LF	yes

Product number	Packaging
83808-xxxxxLF	1000 Rocard Shield/Box
83808-xxxxxLFS	200 Rocard Shield/Box

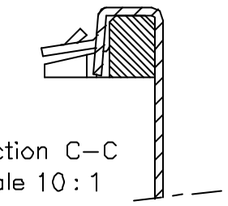

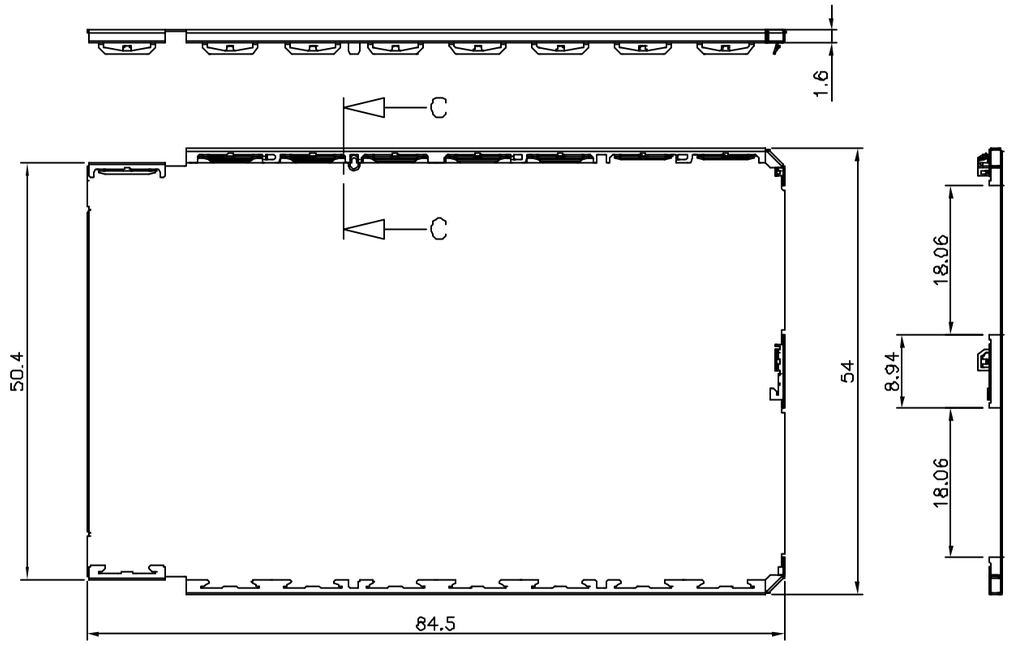

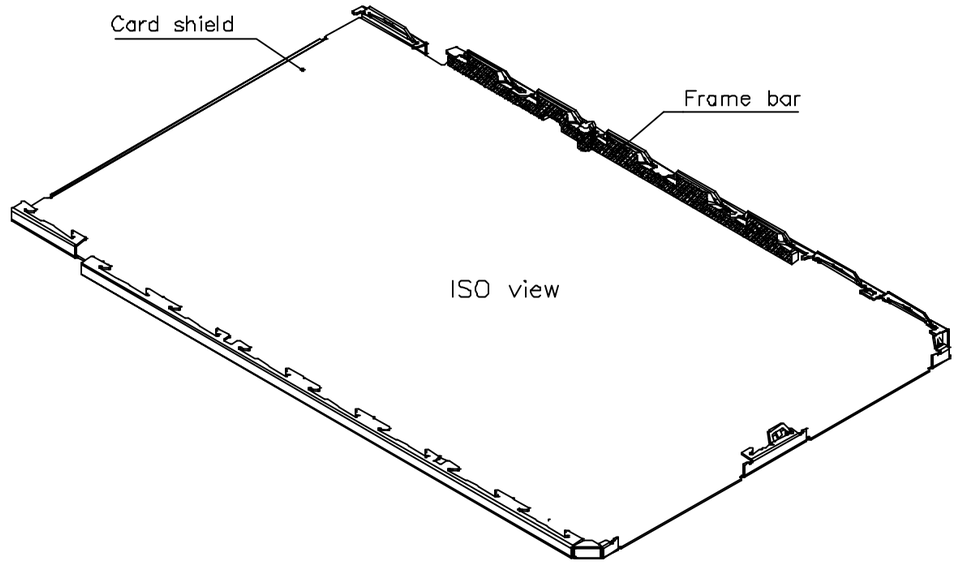

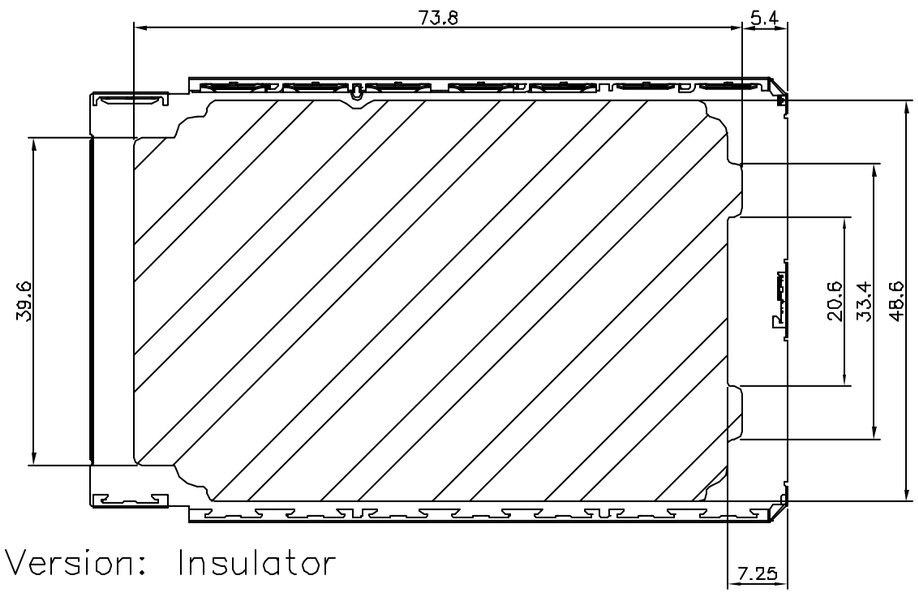

Version: Insulator

(thickness 0.07 mm)

ltr	ecn no	dr	date
A	F80195	GCA	98.04.08
B	F90323	DLE	99.05.04
C	F10514	DLE	01.09.07
D	F05-0254	DLE	05.09.26
E	F06-0136	DLE	06.02.27
F	F06-0248	DLE	06.07.28

mat'l code

surface ISO 1302

tolerance ISO 406 ISO 1101

tolerances unless otherwise specified: angles, linear

dr	H VEREUKEN	98.02.12
engr	F HAUTIER	99.05.04
chr	D LEGRAND	99.05.04
appd	F HAUTIER	99.05.04

projection

mm

scale 2:1

product family: PCMCIA

title: ROCARD SHIELD TYPE I, 2x1/O

dwg no: 83808

sheet 8 of –

size: A2

type: CUSTOMER Drawing

sheet index | revision sheet

Copyright FCI
FCIconnect.com

form: A2

PDM: Rev:M STATUS:Released Printed: Oct 01, 2010

Product number	Insulator
83808-10000LF	no
83808-10010LF	yes

Product number	Packaging
83808-xxxxxLF	1000 Rocard Shield/Box
83808-xxxxxSLF	200 Rocard Shield/Box

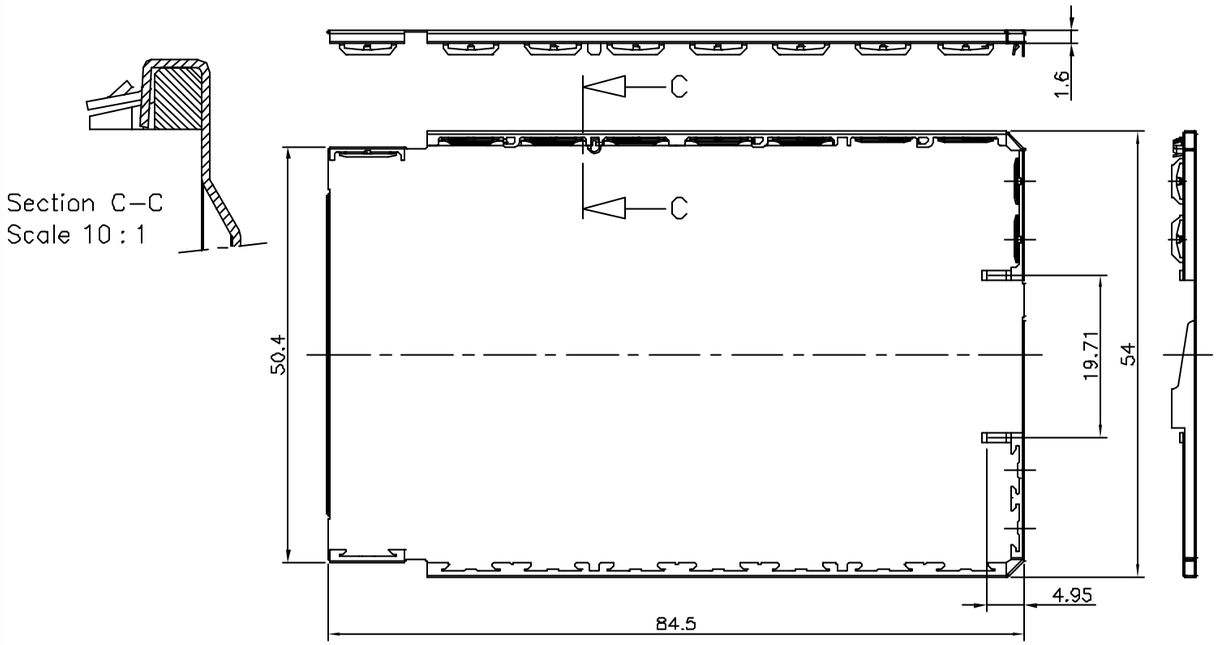

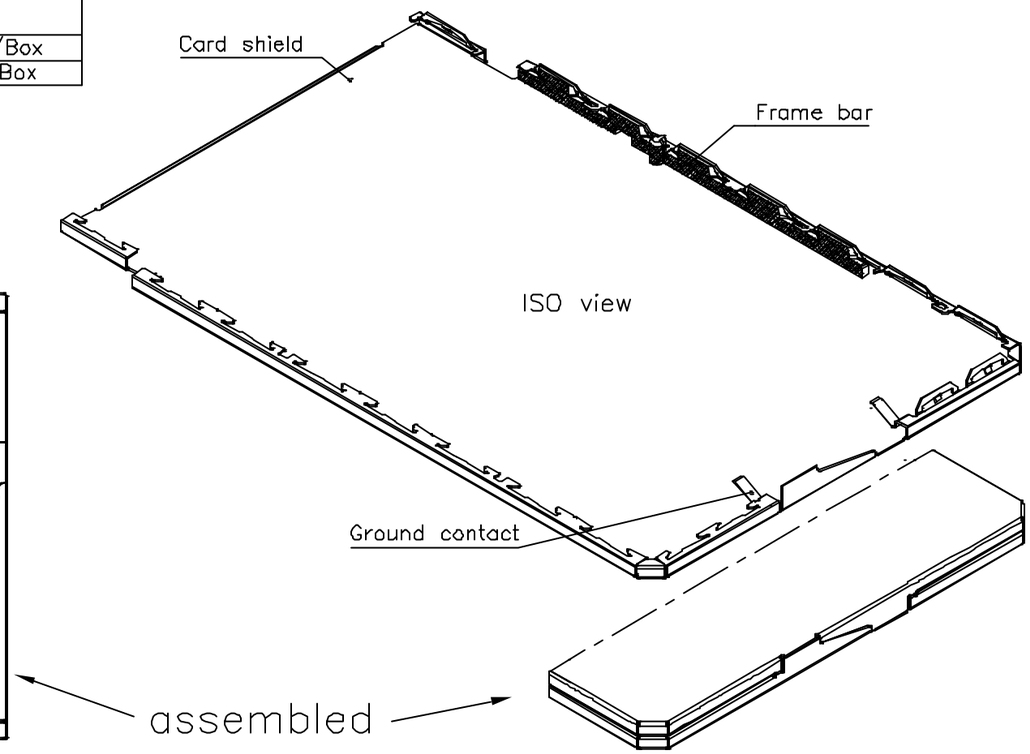

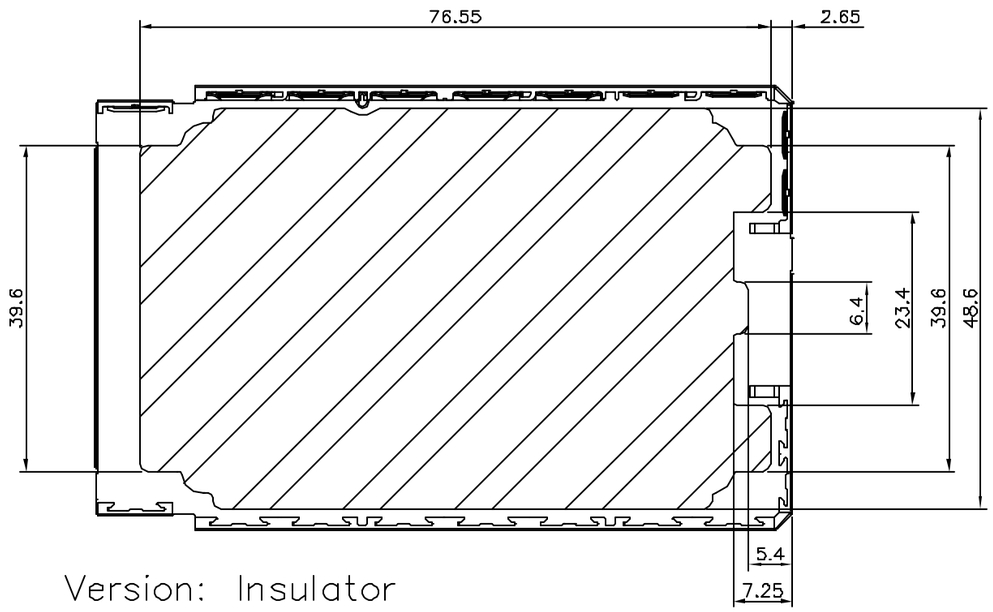

Version: Insulator

(thickness 0.07 mm)

ltr	ecn no	dr	date
A	F80185	GCA	98.04.08
B	F90323	DLE	99.05.04
C	F10514	DLE	01.09.07
D	F05-0254	DLE	05.09.26
E	F06-0136	DLE	06.02.27
F	F06-0248	DLE	06.07.28

mat'l code

surface ISO 1302

tolerance ISO 406 ISO 1101

tolerances unless otherwise specified: angles, linear

projection

mm

scale 2:1

dr	H VEREEUKEN	98.02.12
engr	F HAUTIER	99.05.04
chr	D LEGRAND	99.05.04
appd	F HAUTIER	99.05.04

product family: PCMCIA

title: ROCARD SHIELD TYPE I, CLOSED END

dwg no: 83808

sheet 9 of –

size: A2

type: CUSTOMER Drawing

sheet index | revision sheet

form: A2

FCIconnect.com
Copyright FCI

PDM: Rev:M STATUS:Released Printed: Oct 01, 2010

Product number	Insulator	Label recess
83808-20001LF	no	no
83808-20011LF	yes	no
83808-20101LF	no	yes
83808-20111LF	yes	yes

Product number	Packaging
83808-xxxxxLF	1000 Rocard Shield/Box
83808-xxxxxSLF	200 Rocard Shield/Box

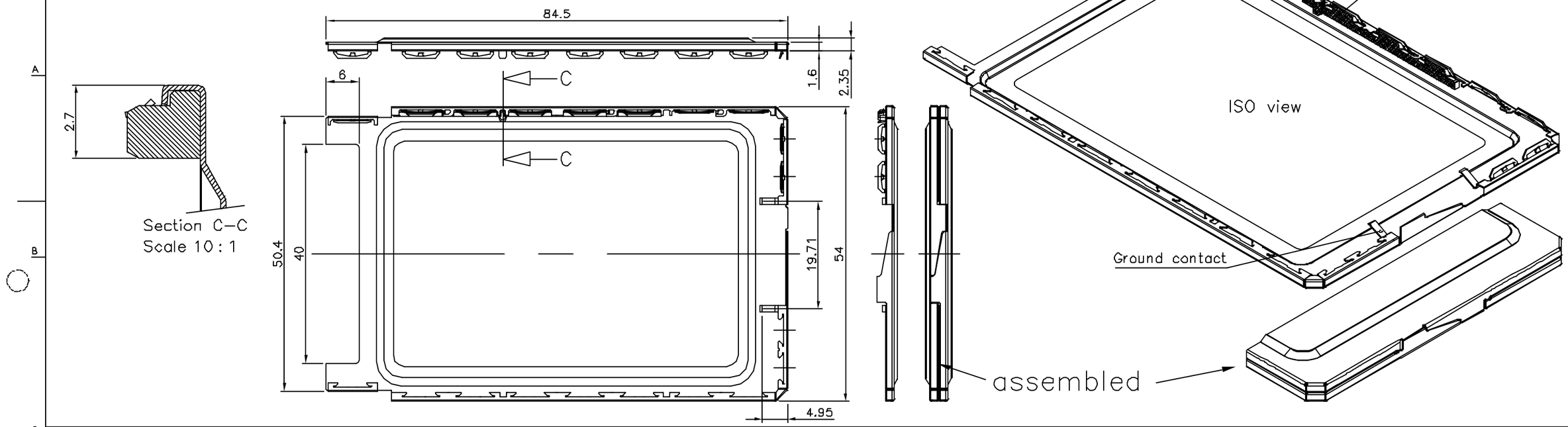

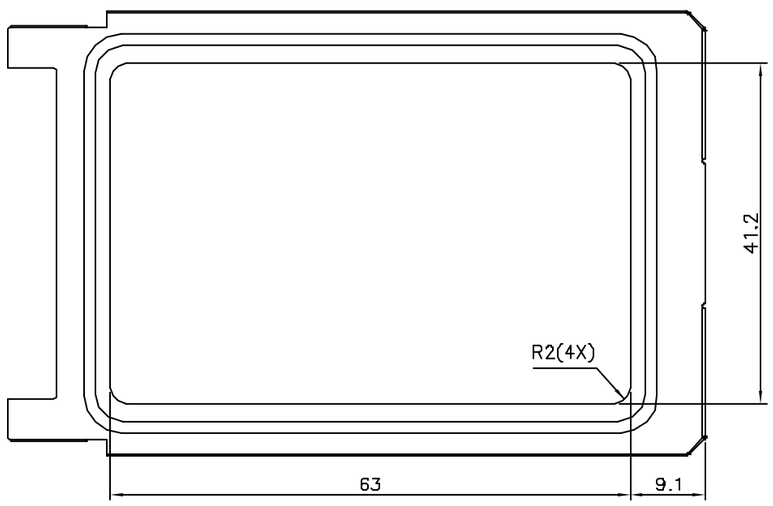

Version: Label recess

(maximum label thickness 0.07 mm)

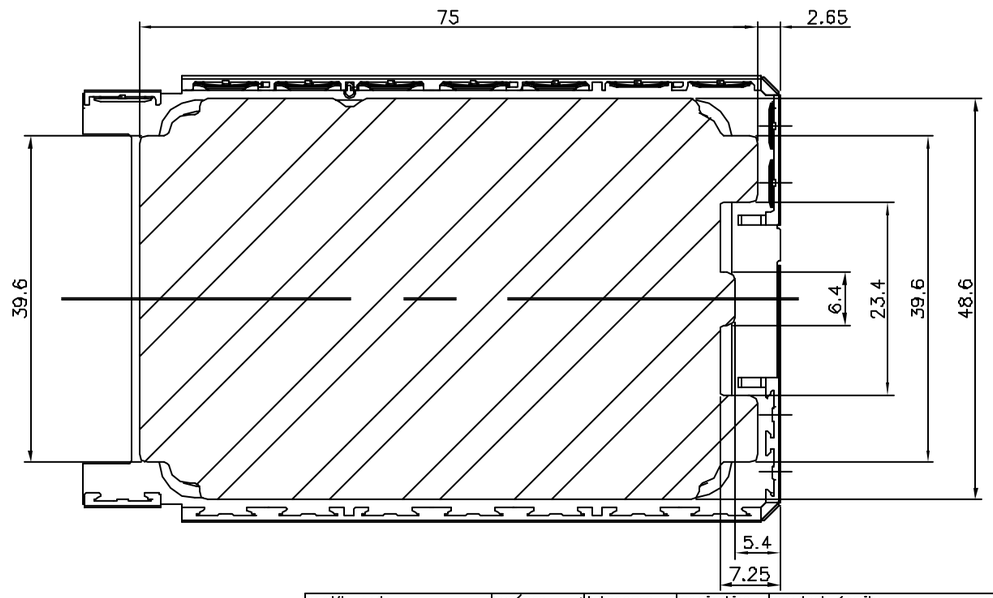

Version: Insulator

(thickness 0.07 mm)

mat'l code				surface ISO 1302 ✓	tolerance ISO 406 ISO 1101	projection
				tolerances unless otherwise specified		
ltr	ecn no	dr	date	angles	linear	mm
A	F90655	DLE	99.10.25			
B	F00106	LMU	00.01.19			
C	F10514	DLE	01.09.07			scale 2:1
D	F05-0254	DLE	05.09.26	dr	D LEGRAND	99.10.25
E	F06-0136	DLE	06.02.27	engr	F HAUTIER	99.10.25
F	F06-0246	DLE	06.07.28	chr	AESCHBACHER	99.10.25
				appd	F HAUTIER	99.10.25

sheet index | revision sheet

product family: PCMCIA

title: ROCARD SHIELD TYPEII,CLOSED,CARDBUS

dwg no: 83808 | sheet 10 of – | size A2

type: CUSTOMER Drawing

FCIconnect.com
Copyright FCI

1mm: A2