THIS DRAWING IS UNPUBLISHED. RELEASED FOR PUBLICATION 20
© COPYRIGHT 20 BY TYCO ELECTRONICS CORPORATION. ALL RIGHTS RESERVED.

PART NUMBER	REV	FIRST USED	POWER UNIT	FEED TYPE	DESCRIPTION
1855204-1	C	122500-1	LEADMAKER	AIR FEED	CUTS CARRIER
1855204-2	C	565435-5	BENCH MODEL K	AIR FEED	CUTS CARRIER
1855204-3	C	354500-1	BENCH MODEL G	AIR FEED	CUTS CARRIER
1855204-6	C	122500-1	LEADMAKER	AIR FEED	CONTINUOUS CARRIER
7-1855204-7	A	-	-	-	SPARE PARTS

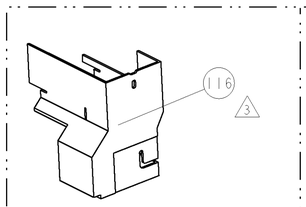

AMP-O-LECTRIC TERM GUARD

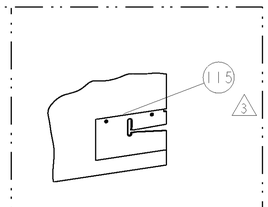

G TERMINATOR GUARD

TERMINAL NAME: TAXI TERM F M/P 280

AMP	PACKARD	PACKARD TERMINAL - AMP CRIMP SPECS			
1949274-1	12110645				
-	-		CRIMP HEIGHT	WIRE SIZE	REF SETTING
-	-		.062±.002[1.57±0.05mm]	16AWG 4	B7
-	-		.059±.002[1.50±0.05mm]	1mm2	C0
-	-		.056±.002[1.42±0.05mm]	18AWG or 0.8mm2	C8
-	-		-	-	-
-	-	CRIMP	SIZE	TYPE	RANGE
-	-	WIRE	.100 [2.54mm]	F	18-16 AWG
-	-	INSUL	.155 [3.94mm]	F	Ø.077-.104
WIRE STRIP LENGTH .219 -.250	TERM APPL SPEC NONE	FEED .640	APPLICATOR INSTRUCTIONS 408-8040		SET UP GAGE 458637-1

LOC	DIST
A	66

REVISIONS

P	LTR	DESCRIPTION	DATE	DWN	APVD
	A	RELEASED	09APR2007	BH	BH
	B	ECR-08-017575	14JUL2008	MY	TE
	C	ECR-08-028831	13NOV2008	DM	DM

1. RECOMMENDED SPARE PARTS
2. GREASE LIGHTLY
3. GUARD MUST BE IN PLACE WHEN OPERATING APPLICATOR IN A BENCH MACHINE
4. 16 AWG NOT RECOMMENDED BY PACKARD FOR THIS TERMINAL.

* WARNING
ON INSTALLATION, SET WIRE DISC TO LARGEST WIRE SIZE SETTING. USE OF SETTINGS BELOW MIN. REQUIRED CRIMP HEIGHT SETTING WILL CAUSE DAMAGE TO CRIMP TOOLING.

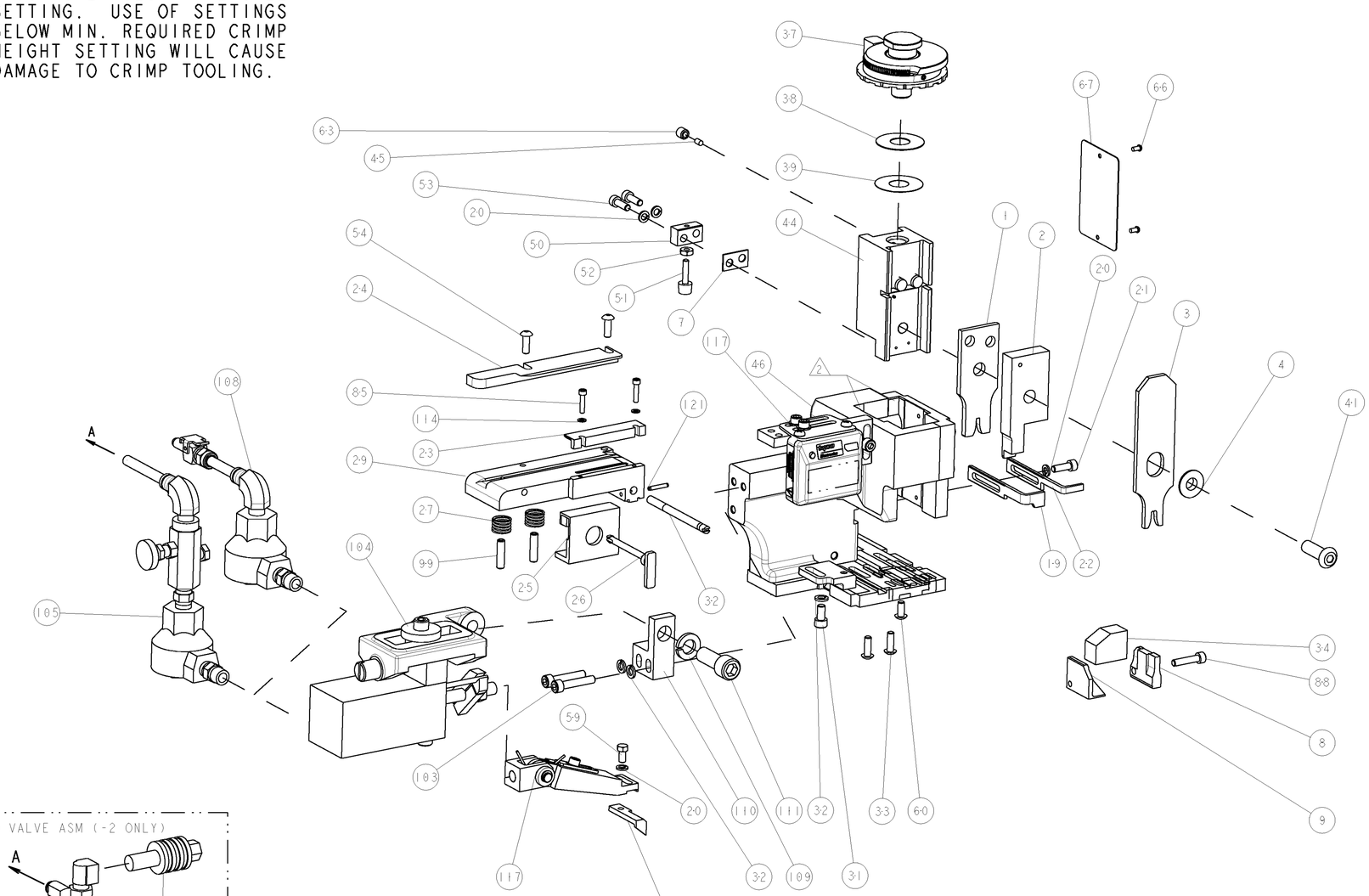

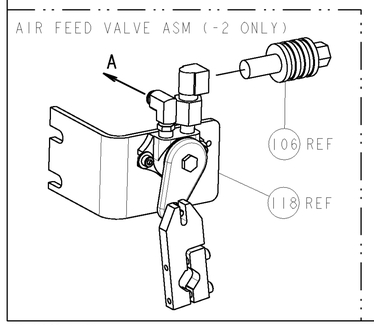

FEED TRACK POSITION

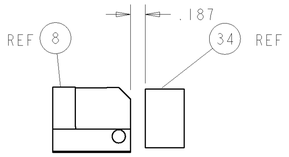

TERMINAL SUPPORT LOCATION

	-77	-6	-3	-2	-1	U/M	PART NO	DESCRIPTION	ITEM NO
	-	1	1	1	1	-	3-21028-7	PIN, SLOTTED SPRING .094 X .562	121
	-	-	-	REF	-	-	692655-6	AIR FEED VALVE ASSEMBLY	118
	-	1	1	1	1	-	461062-1	FEED FINGER ASSEMBLY	117
3	-	-	-	REF	-	..	455749-1	GUARD WINDOW	116
3	-	-	REF	-	-	..	679532-1	INSERT, GUARD	115
	-	2	2	2	2	-	21024-2	WASHER, SPRG LOCK, REG NO 4	114
	-	1	1	1	1	-	3-21001-5	SCR, SKT HD CAP 3/8-16 X 1.000	111
	-	1	1	1	1	-	459610-1	MOUNT, FEED BRACKET	110
	-	1	1	1	1	-	21024-8	WASHER, SPRG LOCK, REG 3/8	109
	-	1	1	-	1	-	692655-7	AIR FEED VALVE ASSEMBLY	108
	-	-	-	REF	-	-	24024-2	VALVE, SHUT OFF	106
	-	-	-	1	-	-	692655-5	AIR FEED VALVE ASSEMBLY	105
	-	1	1	1	1	-	461065-1	ASSEMBLY, AIR FEED	104
	-	2	2	2	2	-	3-21000-9	SCR, SKT HD CAP 10-32 X 1.000	103
	-	2	2	2	2	-	5-21006-6	SCR, SET, CUP POINT 10-32 X .750	99
	-	1	1	1	1	-	2-21000-9	SCR, SKT HD CAP 8-32 X .750	88
	-	2	2	2	2	-	1-21000-5	SCR, SKT HD CAP 4-40 X .500	85
	-	1	1	1	1	-	4088040	SF APPL INST 408-8040	72
	-	1	1	1	1	-	217238-1	GENERAL INSTRUCTION PKG	71
	-	1	1	1	1	-	461264-5	PLATE, IDENTIFICATION	67
	-	2	2	2	2	-	21017-2	SCREW, DRIVE	66
	-	1	1	1	1	-	21009-2	SCR, SET, SELF LOCKING 1/4-20 X .250	63
	-	1	1	1	1	-	22733-8	SCR, BHSC, SELF-LOCKING, 8-32 X .375	60
	-	1	1	1	1	-	2-22603-0	SCR, HEX HD CAP 8-32 X .312	59
	-	1	1	1	1	-	3-694433-2	FEED PAWL	56
	-	2	2	2	2	-	2-21002-2	SCR, BTN SKT HD CAP 8-32 X .500	54
	-	2	2	2	2	-	2-21000-7	SCR, SKT HD CAP 8-32 X .500	53
	-	1	1	1	1	-	21018-5	NUT, HEX, REG 6-32	52
	-	1	1	1	1	-	811242-2	BUMPER, HOLD DOWN	51
	-	1	1	1	1	-	690753-1	SPACER, TONKER	50
	-	1	1	1	1	-	1633399-1	APPL., BASIC AIR FEED SUB ASSY	46
	-	1	1	1	1	-	690191-1	PLUG,NYLON	45
	-	1	1	1	1	-	2-819307-4	RAM, SIDE FEED	44
	-	1	1	1	1	-	690686-2	CRIMPER, BOLT SPECIAL	41
	-	1	1	1	1	-	690125-1	SHIM SUB-ASSY	39
	-	1	1	1	1	-	469367-9	SHIM	38
	-	1	1	1	1	-	879103-2	FINE ADJUST HEAD ASSEMBLY	37
	-	1	1	1	1	-	3-690786-3	TERMINAL SUPPORT	34
	-	2	2	2	2	-	2-21002-2	SCR, BTN SKT HD CAP 8-32 X .500	33
	-	1	1	1	1	-	690432-3	ADJUSTMENT SCREW	32
	-	3	3	3	3	-	21024-5	WASHER, SPRG LOCK, REG NO 10	32
	-	1	1	1	1	-	3-21000-4	SCR, SKT HD CAP 10-32 X .375	31
	-	1	1	1	1	-	5-455671-2	PLATE,STRIP GUIDE	29
	-	2	2	2	2	-	1-22284-0	SPRING, COMPRESSION	27
	-	1	1	1	1	-	690546-1	LEVER, DRAG RELEASE	26
	-	1	1	1	1	-	690754-7	DRAG, SPECIAL	25
	-	1	1	1	1	-	1-690440-9	GUIDE, REAR STRIP	24
	-	1	1	1	1	-	690712-9	FRONT STRIP GUIDE	23
	-	1	-	-	1	-	690472-2	STRIPPER	22
	-	1	1	1	1	-	2-21000-7	SCR, SKT HD CAP 8-32 X .500	21
	-	4	4	4	4	-	21024-4	WASHER, SPRG LOCK, REG NO 8	20
	-	-	1	1	-	-	691353-1	STRIPPER	19
1	-	1	1	1	1	-	853714-5	PLATE, REAR SHEAR	9
1	1	1	1	1	1	-	1214596-5	ANVIL, SPECIAL COMBINATION	8
	-	1	1	1	1	-	1-240641-9	SPACER	7
	-	1	1	1	1	-	238009-1	BLOCK, FL CRIMPER SPACER	4
1	1	1	1	1	1	-	3-456134-6	CRIMPER, INSULATION F PREMIUM	3
1	-	1	1	1	1	-	853720-5	BLADE, SLUG	2
1	1	1	1	1	1	-	2-456407-8	CRIMPER, WIRE PREMIUM	1

THIS DRAWING IS A CONTROLLED DOCUMENT FOR TYCO ELECTRONICS CORPORATION. IT IS SUBJECT TO CHANGE. ANY INFORMATION RECEIVED BY OTHER THAN THE ORGANIZATION SHOULD BE CONTACTED FOR THE LATEST REVISION.

DIMENSIONS: INCHES

TOLERANCES UNLESS OTHERWISE SPECIFIED:
0 PLC ±-
1 PLC ±0.1
2 PLC ±0.01
3 PLC ±0.001
4 PLC ±0.0001
ANGLES ±-

MATERIAL - -
FINISH - -

DWN B.HIGMAN	06MAR2007	
CHK B.HIGMAN	06MAR2007	
APVD T.BENCHOFF	06MAR2007	

PRODUCT SPEC -
APPLICATION SPEC -
WEIGHT -

tyco Electronics — Tyco Electronics, Harrisburg, PA 17105-3608

NAME: FINE ADJUST SIDE FEED HDM APPLICATOR

SIZE	CAGE CODE	DRAWING NO	RESTRICTED TO
A1	00779	C-1855204	-

CUSTOMER DRAWING — SCALE 3:5 — SHEET 1 OF 1 — REV C

CUSTOMER VIEWABLE ASSEMBLY

AMP 4805 REV 31MAR2000

Pro/ENGINEER DRAWING