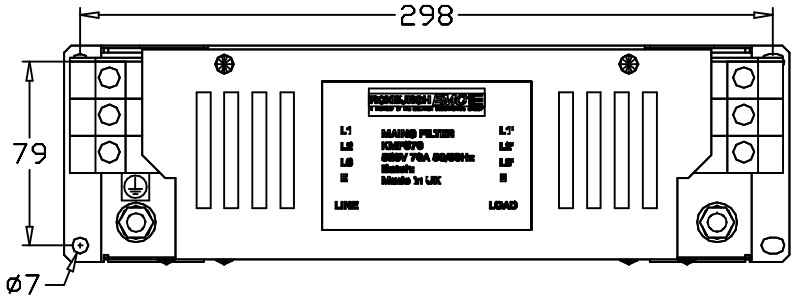

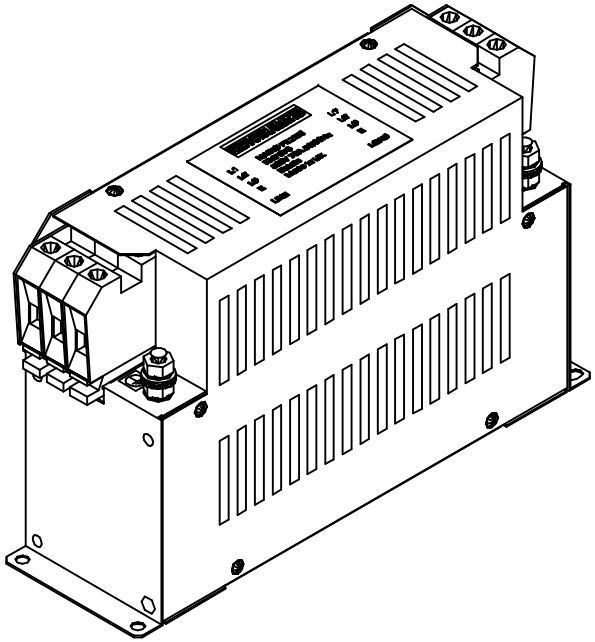

SPECIFICATIONS

VOLTAGE 500Vac
FREQUENCY 50/60Hz
CURRENT 70A @ 40°C
TEMPERATURE −25 TO 100°C
LEAKAGE CURRENT 90mA @ 500V 50Hz
HUMIDITY 90% RH (NON−CONDENSING)
VIBRATION 10−200Hz 1.8G
SURGE 4000Vpk 1.2/50µs
ELECTRIC STRENGTH 2500Vac/1min.
POWER DISSIPATION 19W
MASS 4.1kg
TERMINALS 50sqmm TERMINAL BLOCK
EARTH TERMINALS M8 STUD
FLANGE MOUNTING 4x M6

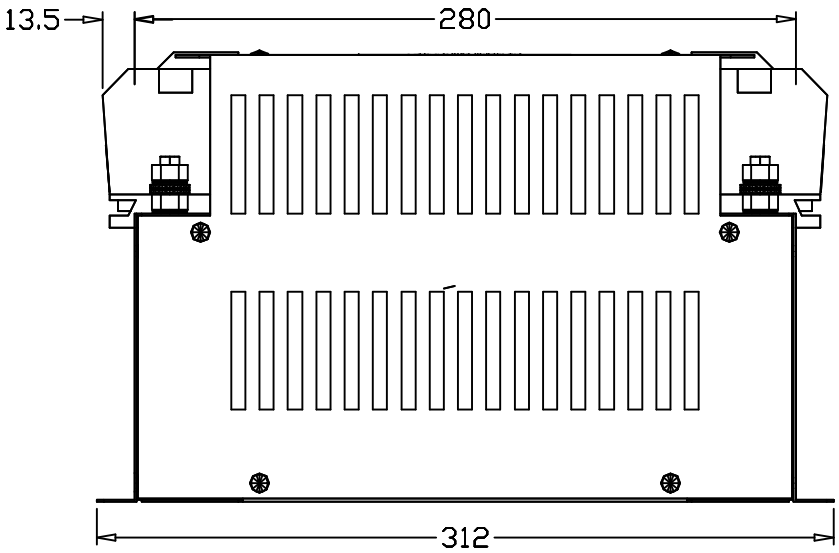

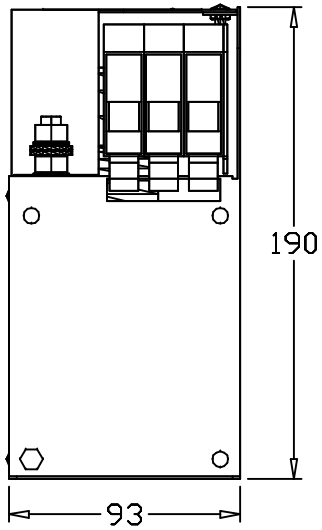

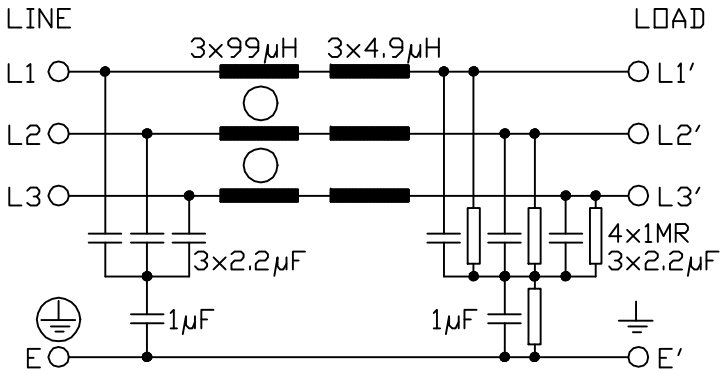

STANDARD FILTER

ALL DIMENSIONS IN MM / ANGLES IN DECIMAL DEGREES

ROXBURGH ELECTRONICS LTD			TITLE 3 PHASE 70A 500V INDUSTRIAL FILTER			
DrgNo KMF370−GS	ISSUE 1		GENERAL SPECIFICATION FOR KMF370		CUSTOMER REFERENCE	
Sheet 1of1	Aprvd Date	Aprvd By NL	Drwn by AT	SCALE	CNN---	Location N:\DWG\GS\GS000075

© ROXBURGH ELECTRONICS LTD, FOXHILLS INDUSTRIAL PARK, SCUNTHORPE, NORTH LINCOLNSHIRE, DN15 8QJ TEL +44 1724 281770 F +44 1724 270230