# S29AL008J

## 8 Megabit (1 M x 8-Bit/512 K x 16-Bit) CMOS 3.0 Volt-only Boot Sector Flash Memory

***Data Sheet***

**Notice to Readers:** This document states the current technical specifications regarding the Spansion product(s) described herein. Spansion Inc. deems the products to have been in sufficient production volume such that subsequent versions of this document are not expected to change. However, typographical or specification corrections, or modifications to the valid combinations offered may occur.

**Publication Number** S29AL008J_00 **Revision** 11 **Issue Date** April 12, 2012

# Notice On Data Sheet Designations

Spansion Inc. issues data sheets with Advance Information or Preliminary designations to advise readers of product information or intended specifications throughout the product life cycle, including development, qualification, initial production, and full production. In all cases, however, readers are encouraged to verify that they have the latest information before finalizing their design. The following descriptions of Spansion data sheet designations are presented here to highlight their presence and definitions.

## Advance Information

The Advance Information designation indicates that Spansion Inc. is developing one or more specific products, but has not committed any design to production. Information presented in a document with this designation is likely to change, and in some cases, development on the product may discontinue. Spansion Inc. therefore places the following conditions upon Advance Information content:

> "This document contains information on one or more products under development at Spansion Inc. The information is intended to help you evaluate this product. Do not design in this product without contacting the factory. Spansion Inc. reserves the right to change or discontinue work on this proposed product without notice."

## Preliminary

The Preliminary designation indicates that the product development has progressed such that a commitment to production has taken place. This designation covers several aspects of the product life cycle, including product qualification, initial production, and the subsequent phases in the manufacturing process that occur before full production is achieved. Changes to the technical specifications presented in a Preliminary document should be expected while keeping these aspects of production under consideration. Spansion places the following conditions upon Preliminary content:

> "This document states the current technical specifications regarding the Spansion product(s) described herein. The Preliminary status of this document indicates that product qualification has been completed, and that initial production has begun. Due to the phases of the manufacturing process that require maintaining efficiency and quality, this document may be revised by subsequent versions or modifications due to changes in technical specifications."

## Combination

Some data sheets contain a combination of products with different designations (Advance Information, Preliminary, or Full Production). This type of document distinguishes these products and their designations wherever necessary, typically on the first page, the ordering information page, and pages with the DC Characteristics table and the AC Erase and Program table (in the table notes). The disclaimer on the first page refers the reader to the notice on this page.

## Full Production (No Designation on Document)

When a product has been in production for a period of time such that no changes or only nominal changes are expected, the Preliminary designation is removed from the data sheet. Nominal changes may include those affecting the number of ordering part numbers available, such as the addition or deletion of a speed option, temperature range, package type, or $V_{IO}$ range. Changes may also include those needed to clarify a description or to correct a typographical error or incorrect specification. Spansion Inc. applies the following conditions to documents in this category:

> "This document states the current technical specifications regarding the Spansion product(s) described herein. Spansion Inc. deems the products to have been in sufficient production volume such that subsequent versions of this document are not expected to change. However, typographical or specification corrections, or modifications to the valid combinations offered may occur."

Questions regarding these document designations may be directed to your local sales office.

# S29AL008J

## 8 Megabit (1 M x 8-Bit/512 K x 16-Bit) CMOS 3.0 Volt-only Boot Sector Flash Memory

*Data Sheet*

# Distinctive Characteristics

## Architectural Advantages

- **Single Power Supply Operation**
  - Full voltage range: 2.7 to 3.6 volt read and write operations for battery-powered applications
- **Manufactured on 110 nm Process Technology**
  - Fully compatible with 200 nm S29AL008D
- **Secured Silicon Sector region**
  - 128-word/256-byte sector for permanent, secure identification through an 8-word/16-byte random Electronic Serial Number accessible through a command sequence
  - May be programmed and locked at the factory or by the customer
- **Flexible Sector Architecture**
  - One 16 Kbyte, two 8 Kbyte, one 32 Kbyte, and fifteen 64 Kbyte sectors (byte mode)
  - One 8 Kword, two 4 Kword, one 16 Kword, and fifteen 32 Kword sectors (word mode)
- **Sector Group Protection Features**
  - A hardware method of locking a sector to prevent any program or erase operations within that sector
  - Sectors can be locked in-system or via programming equipment
  - Temporary Sector Unprotect feature allows code changes in previously locked sectors
- **Unlock Bypass Program Command**
  - Reduces overall programming time when issuing multiple program command sequences
- **Top or Bottom Boot Block Configurations Available**
- **Compatibility with JEDEC standards**
  - Pinout and software compatible with single-power supply Flash
  - Superior inadvertent write protection

## Performance Characteristics

- **High Performance**
  - Access times as fast as 55 ns
  - Extended temperature range (–40°C to +125°C)
- **Ultra Low Power Consumption (typical values at 5 MHz)**
  - 0.2 µA Automatic Sleep mode current
  - 0.2 µA standby mode current
  - 7 mA read current
  - 20 mA program/erase current
- **Cycling Endurance: 1,000,000 cycles per sector typical**
- **Data Retention: 20 years typical**

## Package Options

- **48-ball Fine-pitch BGA**
- **48-pin TSOP**

## Software Features

- **CFI (Common Flash Interface) Compliant**
  - Provides device-specific information to the system, allowing host software to easily reconfigure for different Flash devices
- **Erase Suspend/Erase Resume**
  - Suspends an erase operation to read data from, or program data to, a sector that is not being erased, then resumes the erase operation
- **Data# Polling and Toggle Bits**
  - Provides a software method of detecting program or erase operation completion

## Hardware Features

- **Ready/Busy# Pin (RY/BY#)**
  - Provides a hardware method of detecting program or erase cycle completion
- **Hardware Reset Pin (RESET#)**
  - Hardware method to reset the device to reading array data
- **WP# input pin**
  - For boot sector devices: at $V_{IL}$, protects first or last 16 Kbyte sector depending on boot configuration (top boot or bottom boot)

**Publication Number** S29AL008J_00 **Revision** 11 **Issue Date** April 12, 2012

This document states the current technical specifications regarding the Spansion product(s) described herein. Spansion Inc. deems the products to have been in sufficient production volume such that subsequent versions of this document are not expected to change. However, typographical or specification corrections, or modifications to the valid combinations offered may occur.

# General Description

The S29AL008J is a 8 Mbit, 3.0 Volt-only Flash memory organized as 1,048,576 bytes or 524,288 words. The device is offered in 48-ball Fine-pitch BGA (0.8 mm pitch), and 48-pin TSOP packages. The word-wide data (x16) appears on DQ15–DQ0; the byte-wide (x8) data appears on DQ7–DQ0. This device is designed to be programmed in-system with the standard system 3.0 volt $V_{CC}$ supply. A 12.0 V $V_{PP}$ or 5.0 $V_{CC}$ are not required for write or erase operations. The device can also be programmed in standard EPROM programmers.

The device offers access times of up to 55 ns allowing high speed microprocessors to operate without wait states. To eliminate bus contention the device has separate chip enable (CE#), write enable (WE#) and output enable (OE#) controls.

The device requires only a **single 3.0 volt power supply** for both read and write functions. Internally generated and regulated voltages are provided for the program and erase operations.

The S29AL008J is entirely command set compatible with the **JEDEC single-power-supply Flash standard**. Commands are written to the command register using standard microprocessor write timings. Register contents serve as input to an internal state-machine that controls the erase and programming circuitry. Write cycles also internally latch addresses and data needed for the programming and erase operations. Reading data out of the device is similar to reading from other Flash or EPROM devices.

Device programming occurs by executing the program command sequence. This initiates the **Embedded Program** algorithm—an internal algorithm that automatically times the program pulse widths and verifies proper cell margin. The **Unlock Bypass** mode facilitates faster programming times by requiring only two write cycles to program data instead of four.

Device erasure occurs by executing the erase command sequence. This initiates the **Embedded Erase** algorithm—an internal algorithm that automatically preprograms the array (if it is not already programmed) before executing the erase operation. During erase, the device automatically times the erase pulse widths and verifies proper cell margin.

The host system can detect whether a program or erase operation is complete by observing the RY/BY# pin, or by reading the DQ7 (Data# Polling) and DQ6 (toggle) **status bits**. After a program or erase cycle has been completed, the device is ready to read array data or accept another command.

The **sector erase architecture** allows memory sectors to be erased and reprogrammed without affecting the data contents of other sectors. The device is fully erased when shipped from the factory.

**Hardware data protection** measures include a low $V_{CC}$ detector that automatically inhibits write operations during power transitions. The **hardware sector protection** feature disables both program and erase operations in any combination of the sectors of memory. This can be achieved in-system or via programming equipment.

The **Erase Suspend/Erase Resume** feature enables the user to put erase on hold for any period of time to read data from, or program data to, any sector that is not selected for erasure. True background erase can thus be achieved.

The **hardware RESET# pin** terminates any operation in progress and resets the internal state machine to reading array data. The RESET# pin may be tied to the system reset circuitry. A system reset would thus also reset the device, enabling the system microprocessor to read the boot-up firmware from the Flash memory.

The device offers two power-saving features. When addresses have been stable for a specified amount of time, the device enters the **automatic sleep mode**. The system can also place the device into the **standby mode**. Power consumption is greatly reduced in both these modes.

Spansion Flash technology combines years of Flash memory manufacturing experience to produce the highest levels of quality, reliability and cost effectiveness. The device electrically erases all bits within a sector simultaneously via Fowler-Nordheim tunneling. The data is programmed using hot electron injection.

# Table of Contents


**Distinctive Characteristics** . . . 3

**General Description** . . . 4

**1. Product Selector Guide** . . . 9

**2. Block Diagram** . . . 9

**3. Connection Diagrams** . . . 10
- 3.1 Special Handling Instructions . . . 10

**4. Pin Configuration** . . . 11

**5. Logic Symbol** . . . 11

**6. Ordering Information** . . . 12
- 6.1 S29AL008J Standard Products . . . 12

**7. Device Bus Operations** . . . 13
- 7.1 Word/Byte Configuration . . . 13
- 7.2 Requirements for Reading Array Data . . . 13
- 7.3 Writing Commands/Command Sequences . . . 14
- 7.4 Program and Erase Operation Status . . . 14
- 7.5 Standby Mode . . . 14
- 7.6 Automatic Sleep Mode . . . 15
- 7.7 RESET#: Hardware Reset Pin . . . 15
- 7.8 Output Disable Mode . . . 16
- 7.9 Autoselect Mode . . . 18
- 7.10 Sector Group Protection/Unprotection . . . 18
- 7.11 Temporary Sector Group Unprotect . . . 20

**8. Secured Silicon Sector Flash Memory Region** . . . 22
- 8.1 Factory Locked: Secured Silicon Sector Programmed and Protected at the Factory . . . 22
- 8.2 Customer Lockable: Secured Silicon Sector NOT Programmed or Protected at the Factory . . . 22

**9. Common Flash Memory Interface (CFI)** . . . 24
- 9.1 Hardware Data Protection . . . 26

**10. Command Definitions** . . . 27
- 10.1 Reading Array Data . . . 27
- 10.2 Reset Command . . . 27
- 10.3 Autoselect Command Sequence . . . 27
- 10.4 Enter Secured Silicon Sector/Exit Secured Silicon Sector Command Sequence . . . 28
- 10.5 Word/Byte Program Command Sequence . . . 28
- 10.6 Unlock Bypass Command Sequence . . . 28
- 10.7 Chip Erase Command Sequence . . . 29
- 10.8 Sector Erase Command Sequence . . . 30
- 10.9 Erase Suspend/Erase Resume Commands . . . 30
- 10.10 Command Definitions Table . . . 32

**11. Write Operation Status** . . . 33
- 11.1 DQ7: Data# Polling . . . 33
- 11.2 RY/BY#: Ready/Busy# . . . 34
- 11.3 DQ6: Toggle Bit I . . . 35
- 11.4 DQ2: Toggle Bit II . . . 35
- 11.5 Reading Toggle Bits DQ6/DQ2 . . . 36
- 11.6 DQ5: Exceeded Timing Limits . . . 37
- 11.7 DQ3: Sector Erase Timer . . . 37

**12. Absolute Maximum Ratings** . . . 38

**13. Operating Ranges** . . . 38

**14. DC Characteristics** . . . 39
- 14.1 CMOS Compatible . . . 39

**15. Test Conditions** . . . . . 40

**16. Key to Switching Waveforms** . . . . . 40

**17. AC Characteristics** . . . . . 41
- 17.1 Read Operations . . . . . 41
- 17.2 Hardware Reset (RESET#) . . . . . 42
- 17.3 Word/Byte Configuration (BYTE#) . . . . . 43
- 17.4 Erase/Program Operations . . . . . 44
- 17.5 Temporary Sector Group Unprotect. . . . . 47
- 17.6 Alternate CE# Controlled Erase/Program Operations . . . . . 48

**18. Erase and Programming Performance** . . . . . 49

**19. TSOP and BGA Pin Capacitance** . . . . . 49

**20. Physical Dimensions** . . . . . 50
- 20.1 TS 048—48-Pin Standard TSOP . . . . . 50
- 20.2 VBK048—48-Ball Fine-Pitch Ball Grid Array (BGA) 8.15 mm x 6.15 mm . . . . . 51

**21. Revision History** . . . . . 52

# Figures


Figure 3.1 48-pin Standard TSOP (TS048) . . . 10
Figure 3.2 48-ball Fine-pitch BGA (VBK048) . . . 10
Figure 7.1 Temporary Sector Group Unprotect Operation . . . 20
Figure 7.2 In-System Sector Group Protect/Unprotect Algorithms . . . 21
Figure 8.1 Secured Silicon Sector Protect Verify . . . 23
Figure 10.1 Program Operation . . . 29
Figure 10.2 Erase Operation . . . 31
Figure 11.1 Data# Polling Algorithm . . . 34
Figure 11.2 Toggle Bit Algorithm . . . 36
Figure 13.1 Maximum Negative Overshoot Waveform . . . 38
Figure 13.2 Maximum Positive Overshoot Waveform . . . 38
Figure 15.1 Test Setup . . . 40
Figure 16.1 Input Waveforms and Measurement Levels . . . 40
Figure 17.1 Read Operations Timings . . . 41
Figure 17.2 RESET# Timings . . . 42
Figure 17.3 BYTE# Timings for Read Operations . . . 43
Figure 17.4 BYTE# Timings for Write Operations . . . 43
Figure 17.5 Program Operation Timings . . . 44
Figure 17.6 Chip/Sector Erase Operation Timings . . . 45
Figure 17.7 Back to Back Read/Write Cycle Timing . . . 45
Figure 17.8 Data# Polling Timings (During Embedded Algorithms) . . . 46
Figure 17.9 Toggle Bit Timings (During Embedded Algorithms) . . . 46
Figure 17.10 DQ2 vs. DQ6 for Erase and Erase Suspend Operations . . . 46
Figure 17.11 Temporary Sector Group Unprotect/Timing Diagram . . . 47
Figure 17.12 Sector Group Protect/Unprotect Timing Diagram . . . 47
Figure 17.13 Alternate CE# Controlled Write Operation Timings . . . 48

# Tables


Table 7.1 S29AL008J Device Bus Operations . . . 13
Table 7.2 S29AL008J Top Boot Block Sector Addresses . . . 16
Table 7.3 Secured Silicon Sector Addresses (Top Boot) . . . 16
Table 7.4 S29AL008J Bottom Boot Block Sector Addresses . . . 17
Table 7.5 Secured Silicon Sector Addresses (Bottom Boot) . . . 17
Table 7.6 S29AL008J Autoselect Codes (High Voltage Method) . . . 18
Table 7.7 S29AL008J Top Boot Device Sector/Sector Group Protection . . . 19
Table 7.8 S29AL008J Bottom Boot Device Sector/Sector Group Protection . . . 19
Table 9.1 CFI Query Identification String . . . 24
Table 9.2 System Interface String . . . 24
Table 9.3 Device Geometry Definition . . . 25
Table 9.4 Primary Vendor-Specific Extended Query . . . 25
Table 10.1 S29AL008J Command Definitions . . . 32
Table 11.1 Write Operation Status . . . 37
Table 15.1 Test Specifications . . . 40

# 1. Product Selector Guide

| Family Part Number | | S29AL008J | |
|---|---|---|---|
| Speed Option | Voltage Range: $V_{CC}$ = 2.7-3.6V | | 70 |
| | $V_{CC}$ = 3.0-3.6V | 55 | |
| Max access time, ns ($t_{ACC}$) | | 55 | 70 |
| Max CE# access time, ns ($t_{CE}$) | | 55 | 70 |
| Max CE# access time, ns ($t_{OE}$) | | 30 | 30 |

***Note***
*See AC Characteristics on page 41 for full specifications.*

# 2. Block Diagram

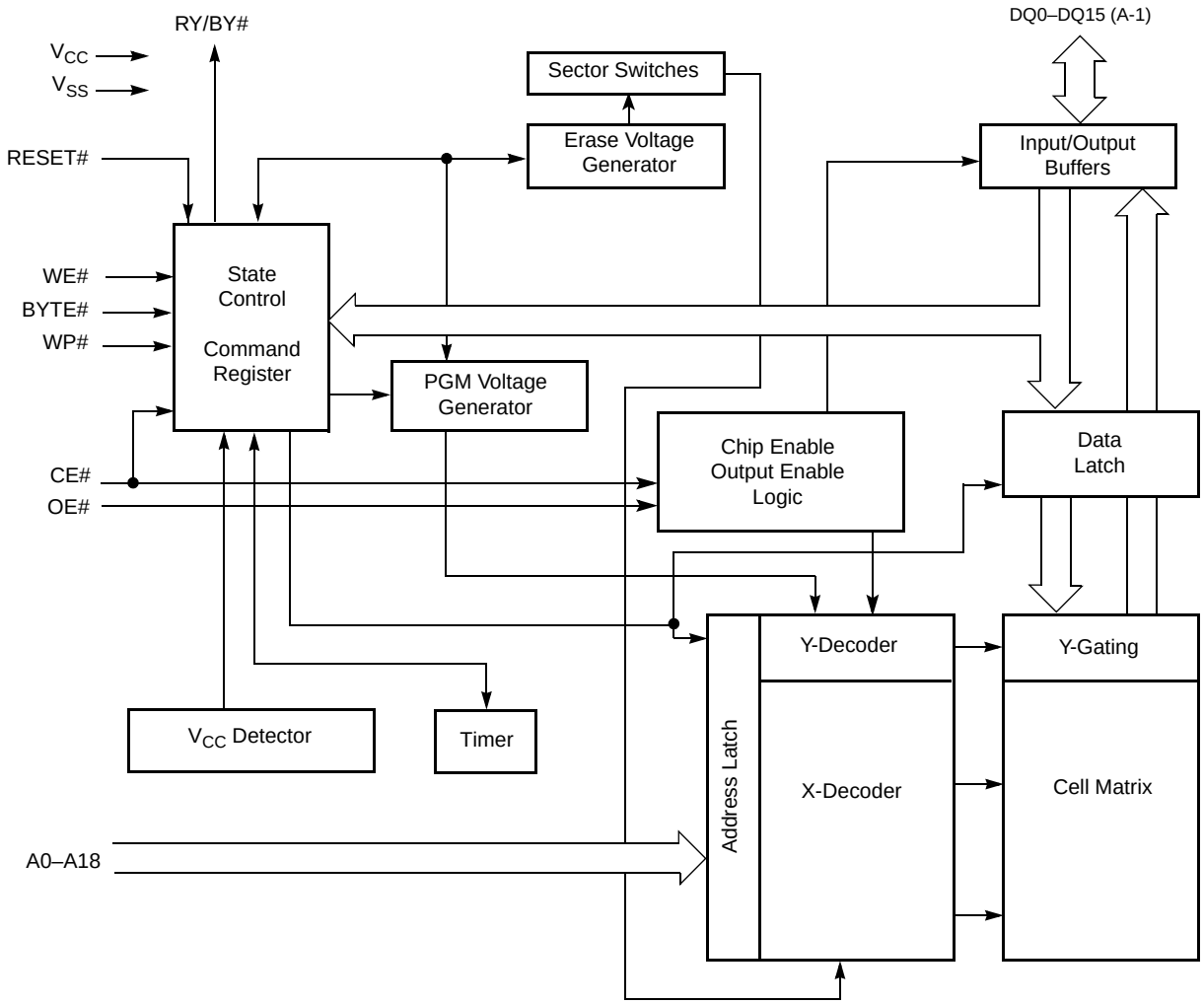

# 3. Connection Diagrams

**Figure 3.1** 48-pin Standard TSOP (TS048)

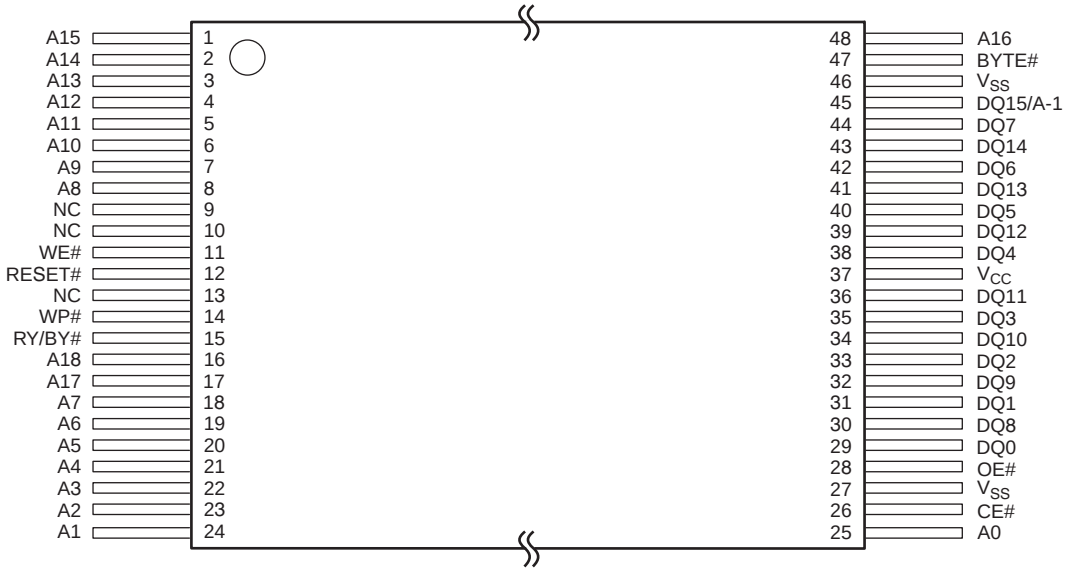


**Figure 3.2** 48-ball Fine-pitch BGA (VBK048)

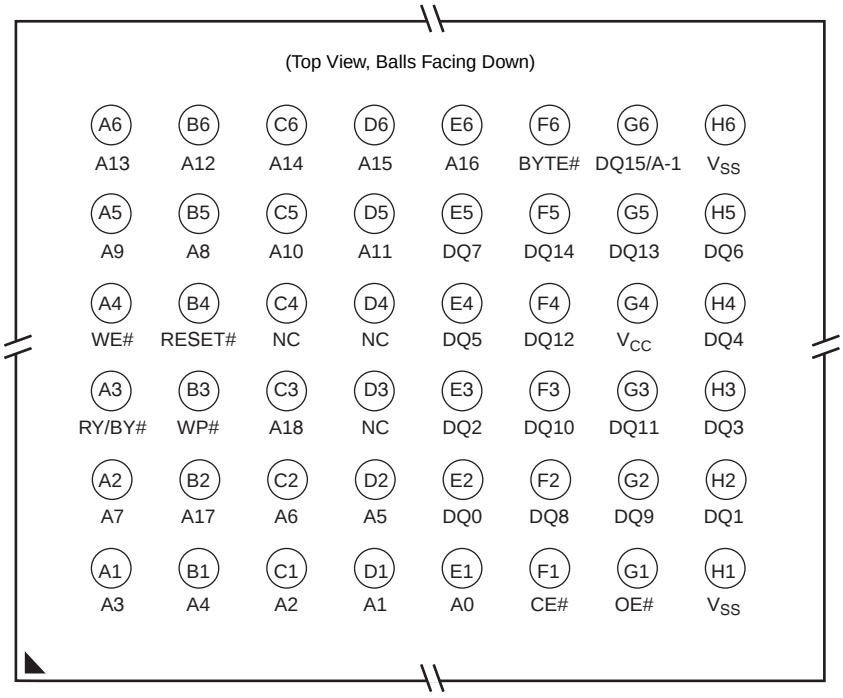


## 3.1 Special Handling Instructions

Special handling is required for Flash Memory products in BGA packages.

Flash memory devices in BGA packages may be damaged if exposed to ultrasonic cleaning methods. The package and/or data integrity may be compromised if the package body is exposed to temperatures above 150° C for prolonged periods of time.

# 4. Pin Configuration

| | |
|---|---|
| A0–A18 | 19 addresses |
| DQ0–DQ14 | 15 data inputs/outputs |
| DQ15/A-1 | DQ15 (data input/output, word mode), A-1 (LSB address input, byte mode) |
| BYTE# | Selects 8-bit or 16-bit mode |
| CE# | Chip enable |
| OE# | Output enable |
| WE# | Write enable |
| WP# | Write protect: The WP# contains an internal pull-up; when unconnected, WP is at $V_{IH}$. |
| RESET# | Hardware reset |
| RY/BY# | Ready/Busy output |
| $V_{CC}$ | 3.0 volt-only single power supply (see *Product Selector Guide* on page 9 for speed options and voltage supply tolerances) |
| $V_{SS}$ | Device ground |
| NC | Pin not connected internally |

# 5. Logic Symbol

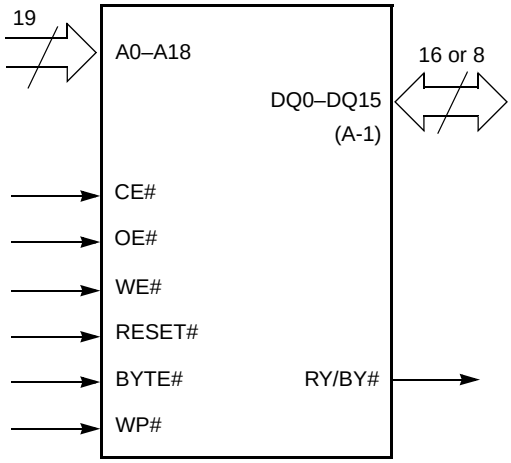

# 6. Ordering Information

## 6.1 S29AL008J Standard Products

Spansion standard products are available in several packages and operating ranges. The order number (Valid Combination) is formed by a combination of the elements below.

**S29AL008J 70 T F I 01 0**

**Packing Type**
0 = Tray
2 = 7” Tape and Reel
3 = 13” Tape and Reel

**Model Number**
01 = $V_{CC}$ = 2.7-3.6V, top boot sector device (CFI Support)
02 = $V_{CC}$ = 2.7-3.6V, bottom boot sector device (CFI Support)
03 = $V_{CC}$ = 2.7-3.6V, top boot sector device (No CFI Support)
04 = $V_{CC}$ = 2.7-3.6V, bottom boot sector device (No CFI Support)
R1 = $V_{CC}$ = 3.0-3.6V, top boot sector device (CFI Support)
R2 = $V_{CC}$ = 3.0-3.6V, bottom boot sector device (CFI Support)

**Temperature Range**
I = Industrial (-40°C to +85°C)
N = Extended (-40°C to +125°C)

**Package Material Set**
F = Pb-Free
H = Low-Halogen, Pb-Free

**Package Type**
T = Thin Small Outline Package (TSOP) Standard Pinout
B = Fine-pitch Ball-Grid Array Package

**Speed Option**
55 = 55 ns Access Speed
70 = 70 ns Access Speed

**Device Number/Description**
S29AL008J
8 Megabit Flash Memory manufactured using 110 nm process technology
3.0 Volt-only Read, Program, and Erase

### Valid Combinations

Valid Combinations list configurations planned to be supported in volume for this device. Consult your local sales office to confirm availability of specific valid combinations and to check on newly released combinations.

| S29AL008J Valid Combination | | | | | Package Description | |
|---|---|---|---|---|---|---|
| **Device Number** | **Speed Option** | **Package Type, Material, and Temperature Range** | **Model Number** | **PackingType** | | |
| S29AL008J | 55 | TFI, TFN | R1, R2 | 0, 3 (Note 1) | TS048 (Note 3) | TSOP |
| | | BFI, BFN, BHI, BHN | | 0, 2, 3 (Note 1) | VBK048 (Note 4) | Fine-Pitch BGA |
| | 70 | TFI, TFN | 01, 02 | 0, 3 (Note 1) | TS048 (Note 3) | TSOP |
| | | BFI, BFN, BHI, BHN | | 0, 2, 3 (Note 1) | VBK048 (Note 4) | Fine-Pitch BGA |
| | | TFI | 03, 04 | 0, 3 (Note 1) | TS048 (Note 3) | TSOP |
| | | BFN, BHN | | 0, 2, 3 (Note 1) | VBK048 (Note 4) | Fine-Pitch BGA |

***Notes***

1. *Type 0 is standard. Specify other options as required.*
2. *Type 1 is standard. Specify other options as required.*
3. *TSOP package markings omit packing type designator from ordering part number.*
4. *BGA package marking omits leading S29 and packing type designator from ordering part number.*

# 7. Device Bus Operations

This section describes the requirements and use of the device bus operations, which are initiated through the internal command register. The command register itself does not occupy any addressable memory location. The register is composed of latches that store the commands, along with the address and data information needed to execute the command. The contents of the register serve as inputs to the internal state machine. The state machine outputs dictate the function of the device. Table 7.1 lists the device bus operations, the inputs and control levels they require, and the resulting output. The following subsections describe each of these operations in further detail.

**Table 7.1** S29AL008J Device Bus Operations

| Operation | CE# | OE# | WE# | RESET# | WP# | Addresses (Note 1) | DQ0–DQ7 | DQ8–DQ15 | |
|---|---|---|---|---|---|---|---|---|---|
| | | | | | | | | BYTE# = $V_{IH}$ | BYTE# = $V_{IL}$ |
| Read | L | L | H | H | X | $A_{IN}$ | $D_{OUT}$ | $D_{OUT}$ | DQ8–DQ14 = High-Z, DQ15 = A-1 |
| Write | L | H | L | H | (Note 3) | $A_{IN}$ | (Note 4) | (Note 4) | |
| Standby | $V_{CC} \pm 0.3$ V | X | X | $V_{CC} \pm 0.3$ V | X | X | High-Z | High-Z | High-Z |
| Output Disable | L | H | H | H | X | X | High-Z | High-Z | High-Z |
| Reset | X | X | X | L | X | X | High-Z | High-Z | High-Z |
| Sector Group Protect (2) (3) | L | H | L | $V_{ID}$ | H | Sector Address, A6 = L, A3 = A2 = L, A1 = H, A0 = L | (Note 4) | X | X |
| Sector Group Unprotect (2) (3) | L | H | L | $V_{ID}$ | H | Sector Address, A6 = H, A3 = A2 = L, A1 = H, A0 = L | (Note 4) | X | X |
| Temporary Sector Group Unprotect | X | X | X | $V_{ID}$ | H | $A_{IN}$ | (Note 4) | (Note 4) | High-Z |

***Legend***

*L = Logic Low = $V_{IL}$; H = Logic High = $V_{IH}$; $V_{ID}$ = 8.5 V to 12.5 V; X = Don't Care; $A_{IN}$ = Address In; $D_{OUT}$ = Data Out*

***Notes***

1. *Address In = Amax:A0 in WORD mode (BYTE#=$V_{IH}$), Address In = Amax:A-1 in BYTE mode (BYTE#=$V_{IL}$). Sector addresses are Amax to A12 in both WORD mode and BYTE mode.*
2. *The sector group protect and sector group unprotect functions may also be implemented via programming equipment. See Sector Group Protection/Unprotection on page 18.*
3. *If WP# = $V_{IL}$, the outermost sector remains protected (determined by device configuration). If WP# = $V_{IH}$, the outermost sector protection depends on whether the sector was last protected or unprotected using the method described in Section 7.10, Sector Group Protection/ Unprotection on page 18. The WP# contains an internal pull-up; when unconnected, WP is at $V_{IH}$.*
4. *$D_{IN}$ or $D_{OUT}$ as required by command sequence, data polling, or sector group protection algorithm.*

## 7.1 Word/Byte Configuration

The BYTE# pin controls whether the device data I/O pins DQ15–DQ0 operate in the byte or word configuration. If the BYTE# pin is set at logic *1*, the device is in word configuration, DQ15–DQ0 are active and controlled by CE# and OE#.

If the BYTE# pin is set at logic *0*, the device is in byte configuration, and only data I/O pins DQ0–DQ7 are active and controlled by CE# and OE#. The data I/O pins DQ8–DQ14 are tri-stated, and the DQ15 pin is used as an input for the LSB (A-1) address function.

## 7.2 Requirements for Reading Array Data

To read array data from the outputs, the system must drive the CE# and OE# pins to $V_{IL}$. CE# is the power control and selects the device. OE# is the output control and gates array data to the output pins. WE# should remain at $V_{IH}$. The BYTE# pin determines whether the device outputs array data in words or bytes.

The internal state machine is set for reading array data upon device power-up, or after a hardware reset. This ensures that no spurious alteration of the memory content occurs during the power transition. No command is necessary in this mode to obtain array data. Standard microprocessor read cycles that assert valid addresses

on the device address inputs produce valid data on the device data outputs. The device remains enabled for read access until the command register contents are altered.

See *Reading Array Data* on page 27 for more information. Refer to the AC *Read Operations* on page 41 for timing specifications and to Figure 17.1 on page 41 for the timing diagram. $I_{CC1}$ in *DC Characteristics* on page 39 represents the active current specification for reading array data.

## 7.3 Writing Commands/Command Sequences

To write a command or command sequence (which includes programming data to the device and erasing sectors of memory), the system must drive WE# and CE# to $V_{IL}$, and OE# to $V_{IH}$.

For program operations, the BYTE# pin determines whether the device accepts program data in bytes or words. See *Word/Byte Configuration* on page 13 for more information.

The device features an **Unlock Bypass** mode to facilitate faster programming. Once the device enters the Unlock Bypass mode, only two write cycles are required to program a word or byte, instead of four. *Word/Byte Program Command Sequence* on page 28 has details on programming data to the device using both standard and Unlock Bypass command sequences.

An erase operation can erase one sector, multiple sectors, or the entire device. Table 7.2 on page 16 and Table 7.4 on page 17 indicate the address space that each sector occupies. A “sector address” consists of the address bits required to uniquely select a sector. The *Command Definitions* on page 27 has details on erasing a sector or the entire chip, or suspending/resuming the erase operation.

After the system writes the autoselect command sequence, the device enters the autoselect mode. The system can then read autoselect codes from the internal register (which is separate from the memory array) on DQ7–DQ0. Standard read cycle timings apply in this mode. Refer to *Autoselect Mode* on page 18 and *Autoselect Command Sequence* on page 27 for more information.

$I_{CC2}$ in *DC Characteristics* on page 39 represents the active current specification for the write mode. *AC Characteristics* on page 41 contains timing specification tables and timing diagrams for write operations.

## 7.4 Program and Erase Operation Status

During an erase or program operation, the system may check the status of the operation by reading the status bits on DQ7–DQ0. Standard read cycle timings and $I_{CC}$ read specifications apply. Refer to *Write Operation Status* on page 33 for more information, and to *AC Characteristics* on page 41 for timing diagrams.

## 7.5 Standby Mode

When the system is not reading or writing to the device, it can place the device in the standby mode. In this mode, current consumption is greatly reduced, and the outputs are placed in the high impedance state, independent of the OE# input.

The device enters the CMOS standby mode when the CE# and RESET# pins are both held at $V_{CC} \pm 0.3$ V. (Note that this is a more restricted voltage range than $V_{IH}$.) If CE# and RESET# are held at $V_{IH}$, but not within $V_{CC} \pm 0.3$ V, the device will be in the standby mode, but the standby current will be greater. The device requires standard access time ($t_{CE}$) for read access when the device is in either of these standby modes, before it is ready to read data.

If the device is deselected during erasure or programming, the device draws active current until the operation is completed.

$I_{CC3}$ and $I_{CC4}$ represents the standby current specification shown in the table in *DC Characteristics* on page 39.

## 7.6 Automatic Sleep Mode

The automatic sleep mode minimizes Flash device energy consumption. The device automatically enables this mode when addresses remain stable for $t_{ACC}$ + 30 ns. The automatic sleep mode is independent of the CE#, WE#, and OE# control signals. Standard address access timings provide new data when addresses are changed. While in sleep mode, output data is latched and always available to the system. $I_{CC4}$ in the *DC Characteristics* on page 39 represents the automatic sleep mode current specification.

## 7.7 RESET#: Hardware Reset Pin

The RESET# pin provides a hardware method of resetting the device to reading array data. When the system drives the RESET# pin to $V_{IL}$ for at least a period of $t_{RP}$, the device **immediately terminates** any operation in progress, tristates all data output pins, and ignores all read/write attempts for the duration of the RESET# pulse. The device also resets the internal state machine to reading array data. The operation that was interrupted should be reinitiated once the device is ready to accept another command sequence, to ensure data integrity.

Current is reduced for the duration of the RESET# pulse. When RESET# is held at $V_{SS}$ ±0.3 V, the device draws CMOS standby current ($I_{CC4}$). If RESET# is held at $V_{IL}$ but not within $V_{SS}$ ±0.3/0.1 V, the standby current will be greater.

The RESET# pin may be tied to the system reset circuitry. A system reset would thus also reset the Flash memory, enabling the system to read the boot-up firmware from the Flash memory. Note that the CE# pin should only go to $V_{IL}$ after RESET# has gone to $V_{IH}$. Keeping CE# at $V_{IL}$ from power up through the first read could cause the first read to retrieve erroneous data.

If RESET# is asserted during a program or erase operation, the RY/BY# pin remains a *0* (busy) until the internal reset operation is complete, which requires a time of $t_{READY}$ (during Embedded Algorithms). The system can thus monitor RY/BY# to determine whether the reset operation is complete. If RESET# is asserted when a program or erase operation is not executing (RY/BY# pin is *1*), the reset operation is completed within a time of $t_{READY}$ (not during Embedded Algorithms). The system can read data $t_{RH}$ after the RESET# pin returns to $V_{IH}$.

Refer to the tables in *AC Characteristics* on page 41 for RESET# parameters and to Figure 17.2 on page 42 for the timing diagram.

## 7.8 Output Disable Mode

When the OE# input is at $V_{IH}$, output from the device is disabled. The output pins are placed in the high impedance state.

**Table 7.2** S29AL008J Top Boot Block Sector Addresses

| Sector | A18 | A17 | A16 | A15 | A14 | A13 | A12 | Sector Size (Kbytes/ Kwords) | Address Range (in hexadecimal) | |
|---|---|---|---|---|---|---|---|---|---|---|
| | | | | | | | | | (x8) Address Range | (x16) Address Range |
| SA0 | 0 | 0 | 0 | 0 | X | X | X | 64/32 | 00000h–0FFFFh | 00000h–07FFFh |
| SA1 | 0 | 0 | 0 | 1 | X | X | X | 64/32 | 10000h–1FFFFh | 08000h–0FFFFh |
| SA2 | 0 | 0 | 1 | 0 | X | X | X | 64/32 | 20000h–2FFFFh | 10000h–17FFFh |
| SA3 | 0 | 0 | 1 | 1 | X | X | X | 64/32 | 30000h–3FFFFh | 18000h–1FFFFh |
| SA4 | 0 | 1 | 0 | 0 | X | X | X | 64/32 | 40000h–4FFFFh | 20000h–27FFFh |
| SA5 | 0 | 1 | 0 | 1 | X | X | X | 64/32 | 50000h–5FFFFh | 28000h–2FFFFh |
| SA6 | 0 | 1 | 1 | 0 | X | X | X | 64/32 | 60000h–6FFFFh | 30000h–37FFFh |
| SA7 | 0 | 1 | 1 | 1 | X | X | X | 64/32 | 70000h–7FFFFh | 38000h–3FFFFh |
| SA8 | 1 | 0 | 0 | 0 | X | X | X | 64/32 | 80000h–8FFFFh | 40000h–47FFFh |
| SA9 | 1 | 0 | 0 | 1 | X | X | X | 64/32 | 90000h–9FFFFh | 48000h–4FFFFh |
| SA10 | 1 | 0 | 1 | 0 | X | X | X | 64/32 | A0000h–AFFFFh | 50000h–57FFFh |
| SA11 | 1 | 0 | 1 | 1 | X | X | X | 64/32 | B0000h–BFFFFh | 58000h–5FFFFh |
| SA12 | 1 | 1 | 0 | 0 | X | X | X | 64/32 | C0000h–CFFFFh | 60000h–67FFFh |
| SA13 | 1 | 1 | 0 | 1 | X | X | X | 64/32 | D0000h–DFFFFh | 68000h–6FFFFh |
| SA14 | 1 | 1 | 1 | 0 | X | X | X | 64/32 | E0000h–EFFFFh | 70000h–77FFFh |
| SA15 | 1 | 1 | 1 | 1 | 0 | X | X | 32/16 | F0000h–F7FFFh | 78000h–7BFFFh |
| SA16 | 1 | 1 | 1 | 1 | 1 | 0 | 0 | 8/4 | F8000h–F9FFFh | 7C000h–7CFFFh |
| SA17 | 1 | 1 | 1 | 1 | 1 | 0 | 1 | 8/4 | FA000h–FBFFFh | 7D000h–7DFFFh |
| SA18 | 1 | 1 | 1 | 1 | 1 | 1 | X | 16/8 | FC000h–FFFFFh | 7E000h–7FFFFh |

***Note***

*Address range is A18:A-1 in byte mode and A19:A0 in word mode. See Word/Byte Configuration on page 13.*

**Table 7.3** Secured Silicon Sector Addresses (Top Boot)

| Sector Size (bytes/words) | x8 Address Range | x16 Address Range |
|---|---|---|
| 256/128 | FFF00h–FFFFFh | 7FF80h–7FFFFh |

**Table 7.4** S29AL008J Bottom Boot Block Sector Addresses

| Sector | A18 | A17 | A16 | A15 | A14 | A13 | A12 | Sector Size (Kbytes/ Kwords) | Address Range (in hexadecimal) | |
|---|---|---|---|---|---|---|---|---|---|---|
| | | | | | | | | | (x8) Address Range | (x16) Address Range |
| SA0 | 0 | 0 | 0 | 0 | 0 | 0 | X | 16/8 | 00000h–03FFFh | 00000h–01FFFh |
| SA1 | 0 | 0 | 0 | 0 | 0 | 1 | 0 | 8/4 | 04000h–05FFFh | 02000h–02FFFh |
| SA2 | 0 | 0 | 0 | 0 | 0 | 1 | 1 | 8/4 | 06000h–07FFFh | 03000h–03FFFh |
| SA3 | 0 | 0 | 0 | 0 | 1 | X | X | 32/16 | 08000h–0FFFFh | 04000h–07FFFh |
| SA4 | 0 | 0 | 0 | 1 | X | X | X | 64/32 | 10000h–1FFFFh | 08000h–0FFFFh |
| SA5 | 0 | 0 | 1 | 0 | X | X | X | 64/32 | 20000h–2FFFFh | 10000h–17FFFh |
| SA6 | 0 | 0 | 1 | 1 | X | X | X | 64/32 | 30000h–3FFFFh | 18000h–1FFFFh |
| SA7 | 0 | 1 | 0 | 0 | X | X | X | 64/32 | 40000h–4FFFFh | 20000h–27FFFh |
| SA8 | 0 | 1 | 0 | 1 | X | X | X | 64/32 | 50000h–5FFFFh | 28000h–2FFFFh |
| SA9 | 0 | 1 | 1 | 0 | X | X | X | 64/32 | 60000h–6FFFFh | 30000h–37FFFh |
| SA10 | 0 | 1 | 1 | 1 | X | X | X | 64/32 | 70000h–7FFFFh | 38000h–3FFFFh |
| SA11 | 1 | 0 | 0 | 0 | X | X | X | 64/32 | 80000h–8FFFFh | 40000h–47FFFh |
| SA12 | 1 | 0 | 0 | 1 | X | X | X | 64/32 | 90000h–9FFFFh | 48000h–4FFFFh |
| SA13 | 1 | 0 | 1 | 0 | X | X | X | 64/32 | A0000h–AFFFFh | 50000h–57FFFh |
| SA14 | 1 | 0 | 1 | 1 | X | X | X | 64/32 | B0000h–BFFFFh | 58000h–5FFFFh |
| SA15 | 1 | 1 | 0 | 0 | X | X | X | 64/32 | C0000h–CFFFFh | 60000h–67FFFh |
| SA16 | 1 | 1 | 0 | 1 | X | X | X | 64/32 | D0000h–DFFFFh | 68000h–6FFFFh |
| SA17 | 1 | 1 | 1 | 0 | X | X | X | 64/32 | E0000h–EFFFFh | 70000h–77FFFh |
| SA18 | 1 | 1 | 1 | 1 | X | X | X | 64/32 | F0000h–FFFFFh | 78000h–7FFFFh |

***Note***
*Address range is A18:A-1 in byte mode and A19:A0 in word mode. See the Word/Byte Configuration on page 13.*

**Table 7.5** Secured Silicon Sector Addresses (Bottom Boot)

| Sector Size (bytes/words) | x8 Address Range | x16 Address Range |
|---|---|---|
| 256/128 | 000000h–0000FFh | 00000h–0007Fh |

## 7.9 Autoselect Mode

The autoselect mode provides manufacturer and device identification, and sector group protection verification, through identifier codes output on DQ7–DQ0. This mode is primarily intended for programming equipment to automatically match a device to be programmed with its corresponding programming algorithm. However, the autoselect codes can also be accessed in-system through the command register.

When using programming equipment, the autoselect mode requires $V_{ID}$ (8.5 V to 12.5 V) on address pin A9. Address pins A6 and A3–A0 must be as shown in Table 7.6. In addition, when verifying sector group protection, the sector address must appear on the appropriate highest order address bits (see Table 7.2 on page 16 and Table 7.4 on page 17). Table 7.6 shows the remaining address bits that are don't care. When all necessary bits have been set as required, the programming equipment may then read the corresponding identifier code on DQ7-DQ0.

To access the autoselect codes in-system, the host system can issue the autoselect command via the command register, as shown in Table 10.1 on page 32. This method does not require $V_{ID}$. See *Command Definitions* on page 27 for details on using the autoselect mode.

**Table 7.6** S29AL008J Autoselect Codes (High Voltage Method)

| Description | Mode | CE# | OE# | WE# | A18 to A10 | A9 | A8 to A7 | A6 | A5 to A4 | A3 to A2 | A1 | A0 | DQ8 to DQ15 | DQ7 to DQ0 |
|---|---|---|---|---|---|---|---|---|---|---|---|---|---|---|
| Manufacturer ID: Spansion | | L | L | H | X | $V_{ID}$ | X | L | X | L | L | L | X | 01h |
| Device ID: S29AL008J (Top Boot Block) | Word | L | L | H | X | $V_{ID}$ | X | L | X | L | L | H | 22h | DAh |
| | Byte | L | L | H | | | | | | | | | X | DAh |
| Device ID: S29AL008J (Bottom Boot Block) | Word | L | L | H | X | $V_{ID}$ | X | L | X | L | L | H | 22h | 5Bh |
| | Byte | L | L | H | | | | | | | | | X | 5Bh |
| Sector Group Protection Verification | | L | L | H | SA | $V_{ID}$ | X | L | X | L | H | L | X | 01h (protected) |
| | | | | | | | | | | | | | X | 00h (unprotected) |
| Secured Silicon Sector Indicator Bit (DQ7) Top Boot Block | | L | L | H | X | $V_{ID}$ | X | L | X | L | H | H | X | 8Eh (factory locked)<br>0Eh (not factory locked) |
| Secured Silicon Sector Indicator Bit (DQ7) Bottom Boot Block | | L | L | H | X | $V_{ID}$ | X | L | X | L | H | H | X | 96h (factory locked)<br>16h (not factory locked) |

***Legend***
*L = Logic Low = $V_{IL}$; H = Logic High = $V_{IH}$; SA = Sector Address; X = Don't care*

***Note***
*The autoselect codes may also be accessed in-system via command sequences. See Table 10.1 on page 32.*

## 7.10 Sector Group Protection/Unprotection

The hardware sector group protection feature disables both program and erase operations in any sector group (see Table 7.2 on page 16 to Table 7.5 on page 17). The hardware sector group unprotection feature re-enables both program and erase operations in previously protected sector groups. Sector group protection/unprotection can be implemented via two methods.

Sector protection/unprotection requires $V_{ID}$ on the RESET# pin only, and can be implemented either in-system or via programming equipment. Figure 7.2 on page 21 shows the algorithms and Figure 17.11 on page 47 shows the timing diagram. This method uses standard microprocessor bus cycle timing. For sector group unprotect, all unprotected sector groups must first be protected prior to the first sector group unprotect write cycle.

The device is shipped with all sector groups unprotected. Spansion offers the option of programming and protecting sector groups at its factory prior to shipping the device through Spansion Programming Service. Contact a Spansion representative for details.

It is possible to determine whether a sector group is protected or unprotected. See *Autoselect Mode* on page 18 for details.

**Table 7.7** S29AL008J Top Boot Device Sector/Sector Group Protection

| Sector / Sector Block | A18 | A17 | A16 | A15 | A14 | A13 | A12 | Sector / Sector Block Size |
|---|---|---|---|---|---|---|---|---|
| SA0-SA3 | 0 | 0 | X | X | X | X | X | 256 (4x64) Kbytes |
| SA4-SA7 | 0 | 1 | X | X | X | X | X | 256 (4x64) Kbytes |
| SA8-SA11 | 1 | 0 | X | X | X | X | X | 256 (4x64) Kbytes |
| SA12-SA13 | 1 | 1 | 0 | X | X | X | X | 128 (2x64) Kbytes |
| SA14 | 1 | 1 | 1 | 0 | X | X | X | 64 Kbytes |
| SA15 | 1 | 1 | 1 | 1 | 0 | X | X | 32 Kbytes |
| SA16 | 1 | 1 | 1 | 1 | 1 | 0 | 0 | 8 Kbytes |
| SA17 | 1 | 1 | 1 | 1 | 1 | 0 | 1 | 8 Kbytes |
| SA18 | 1 | 1 | 1 | 1 | 1 | 1 | X | 16 Kbytes |

**Table 7.8** S29AL008J Bottom Boot Device Sector/Sector Group Protection

| Sector / Sector Block | A18 | A17 | A16 | A15 | A14 | A13 | A12 | Sector / Sector Block Size |
|---|---|---|---|---|---|---|---|---|
| SA0 | 0 | 0 | 0 | 0 | 0 | 0 | X | 16 Kbytes |
| SA1 | 0 | 0 | 0 | 0 | 0 | 1 | 0 | 8 Kbytes |
| SA2 | 0 | 0 | 0 | 0 | 0 | 1 | 1 | 8 Kbytes |
| SA3 | 0 | 0 | 0 | 0 | 1 | X | X | 32 Kbytes |
| SA4 | 0 | 0 | 0 | 1 | X | X | X | 64 Kbytes |
| SA5-SA6 | 0 | 0 | 1 | X | X | X | X | 128 (2x64) Kbytes |
| SA7-SA10 | 0 | 1 | X | X | X | X | X | 256 (4x64) Kbytes |
| SA11-SA14 | 1 | 0 | X | X | X | X | X | 256 (4x64) Kbytes |
| SA15-SA18 | 1 | 1 | X | X | X | X | X | 256 (4x64) Kbytes |

## 7.11 Temporary Sector Group Unprotect

This feature allows temporary unprotection of previously protected sector groups to change data in-system. The Sector Group Unprotect mode is activated by setting the RESET# pin to $V_{ID}$. During this mode, formerly protected sector groups can be programmed or erased by selecting the sector addresses. Once $V_{ID}$ is removed from the RESET# pin, all the previously protected sector groups are protected again. Figure 7.1 shows the algorithm, and Figure 17.11 on page 47 shows the timing diagrams, for this feature.

**Figure 7.1** Temporary Sector Group Unprotect Operation

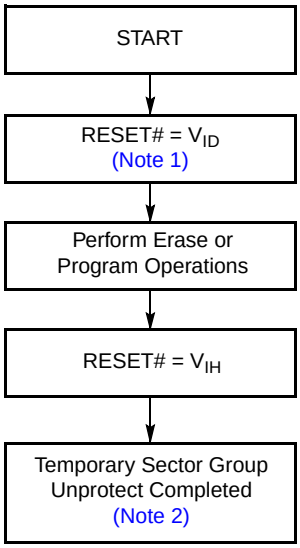


***Notes***

1. *All protected sector groups unprotected. (If WP# = $V_{IL}$, the highest or lowest address sector remains protected for uniform sector devices; the top or bottom two address sectors remains protected for boot sector devices).*
2. *All previously protected sector groups are protected once again.*

**Figure 7.2** In-System Sector Group Protect/Unprotect Algorithms

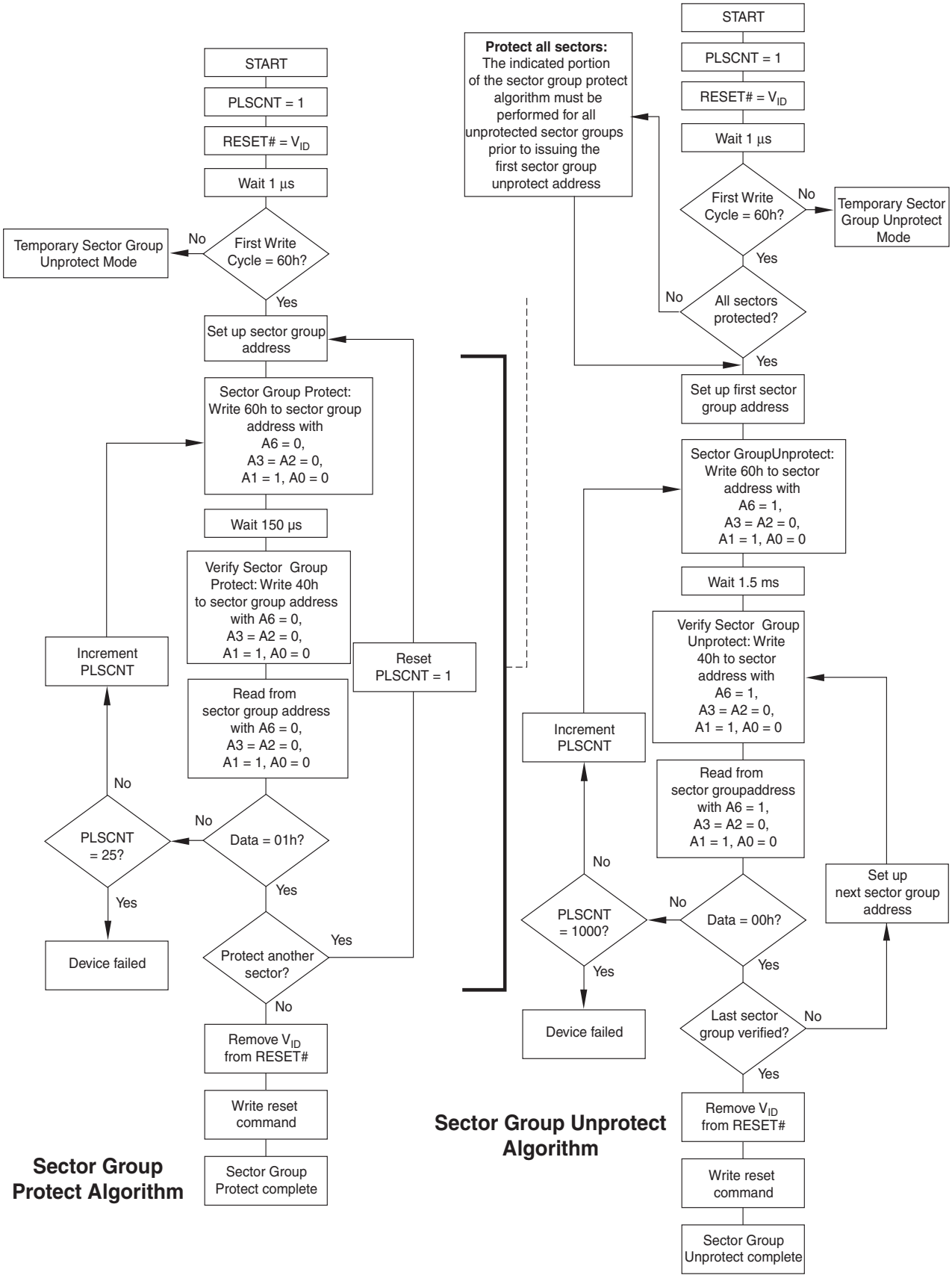

# 8. Secured Silicon Sector Flash Memory Region

The Secured Silicon Sector feature provides a 256-byte Flash memory region that enables permanent part identification through an Electronic Serial Number (ESN). The Secured Silicon Sector uses a Secured Silicon Sector Indicator Bit (DQ7) to indicate whether or not the Secured Silicon Sector is locked when shipped from the factory. This bit is permanently set at the factory and cannot be changed, which prevents cloning of a factory-locked part. This ensures the security of the ESN once the product is shipped to the field.

Spansion offers the device with the Secured Silicon Sector either factory-locked or customer-lockable. The factory-locked version is always protected when shipped from the factory, and has the Secured Silicon Sector Indicator Bit permanently set to a *1.* The customer-lockable version is shipped with the Secured Silicon Sector unprotected, allowing customers to utilize the that sector in any manner they choose. The customer-lockable version has the Secured Silicon Sector Indicator Bit permanently set to a *0.* Thus, the Secured Silicon Sector Indicator Bit prevents customer-lockable devices from being used to replace devices that are factory locked.

The system accesses the Secured Silicon Sector through a command sequence (see Enter Secured Silicon Sector/Exit Secured Silicon Sector Command Sequence on page 28). After the system writes the Enter Secured Silicon Sector command sequence, it may read the Secured Silicon Sector by using the addresses normally occupied by the boot sectors. This mode of operation continues until the system issues the Exit Secured Silicon Sector command sequence, or until power is removed from the device. On power-up, or following a hardware reset, the device reverts to sending commands to the boot sectors.

## 8.1 Factory Locked: Secured Silicon Sector Programmed and Protected at the Factory

In a factory locked device, the Secured Silicon Sector is protected when the device is shipped from the factory. The Secured Silicon Sector cannot be modified in any way. The device is available pre-programmed with one of the following:

- A random, secure ESN only.
- Customer code through the ExpressFlash service.
- Both a random, secure ESN and customer code through the ExpressFlash service.

In devices that have an ESN, a Bottom Boot device has the 16-byte (8-word) ESN in sector 0 at addresses 00000h–0000Fh in byte mode (or 00000h–00007h in word mode). In the Top Boot device, the ESN is in sector 18 at addresses FFFF0h–FFFFFh in byte mode (or 7FFF8h–7FFFFh in word mode).

Customers may opt to have their code programmed by Spansion through the Spansion ExpressFlash service. Spansion programs the customer's code, with or without the random ESN. The devices are then shipped from the Spansion factory with the Secured Silicon Sector permanently locked. Contact a Spansion representative for details on using the Spansion ExpressFlash service.

## 8.2 Customer Lockable: Secured Silicon Sector NOT Programmed or Protected at the Factory

The customer lockable version allows the Secured Silicon Sector to be programmed once, and then permanently locked after it ships from Spansion. Note that the unlock bypass functions is not available when programming the Secured Silicon Sector.

The Secured Silicon Sector area can be protected using the following procedures:

- Write the three-cycle Enter Secured Silicon Region command sequence, and then follow the in-system sector group protect algorithm as shown in Figure 7.2 on page 21, substituting the sector group address with the Secured Silicon Sector group address (A0=0, A1=1, A2=0, A3=1, A4=1, A5=0, A6=0, A7=0). Note that this method is only applicable to the Secured Silicon Sector.
- To verify the protect/unprotect status of the Secured Silicon Sector, follow the algorithm shown in Figure 8.1 on page 23.

Once the Secured Silicon Sector is locked and verified, the system must write the Exit Secured Silicon Sector Region command sequence to return to reading and writing the remainder of the array.

The Secured Silicon Sector protection must be used with caution since, once protected, there is no procedure available for unprotecting the Secured Silicon Sector area, and none of the bits in the Secured Silicon Sector memory space can be modified in any way.

**Figure 8.1** Secured Silicon Sector Protect Verify

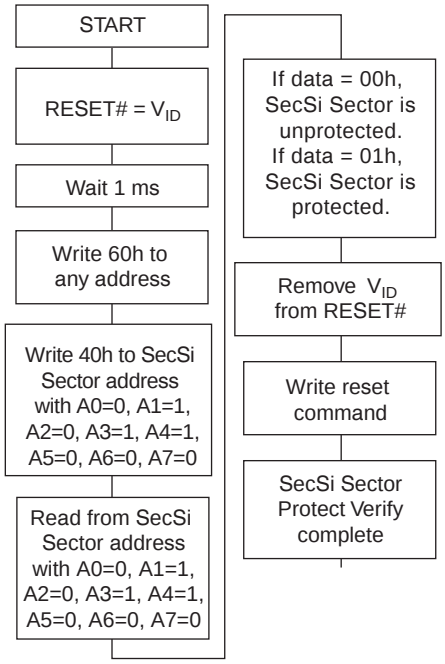

# 9. Common Flash Memory Interface (CFI)

The Common Flash Interface (CFI) specification outlines device and host system software interrogation handshake, which allows specific vendor-specified software algorithms to be used for entire families of devices. Software support can then be device-independent, JEDEC ID-independent, and forward- and backward-compatible for the specified flash device families. Flash vendors can standardize their existing interfaces for long-term compatibility.

This device enters the CFI Query mode when the system writes the CFI Query command, 98h, to address 55h in word mode (or address AAh in byte mode), any time the device is ready to read array data. The system can read CFI information at the addresses given in Table 9.1 to Table 9.4 on page 25. In word mode, the upper address bits (A7–MSB) must be all zeros. To terminate reading CFI data, the system must write the reset command.

The system can also write the CFI query command when the device is in the autoselect mode. The device enters the CFI query mode, and the system can read CFI data at the addresses given in Table 9.1 to Table 9.4 on page 25. The system must write the reset command to return the device to the autoselect mode.

**Table 9.1** CFI Query Identification String

| Addresses (Word Mode) | Addresses (Byte Mode) | Data | Description |
|---|---|---|---|
| 10h<br>11h<br>12h | 20h<br>22h<br>24h | 0051h<br>0052h<br>0059h | Query Unique ASCII string “QRY” |
| 13h<br>14h | 26h<br>28h | 0002h<br>0000h | Primary OEM Command Set |
| 15h<br>16h | 2Ah<br>2Ch | 0040h<br>0000h | Address for Primary Extended Table |
| 17h<br>18h | 2Eh<br>30h | 0000h<br>0000h | Alternate OEM Command Set (00h = none exists) |
| 19h<br>1Ah | 32h<br>34h | 0000h<br>0000h | Address for Alternate OEM Extended Table (00h = none exists) |

**Table 9.2** System Interface String

| Addresses (Word Mode) | Addresses (Byte Mode) | Data | Description |
|---|---|---|---|
| 1Bh | 36h | 0027h | $V_{CC}$ Min. (write/erase)<br>D7–D4: volt, D3–D0: 100 millivolt |
| 1Ch | 38h | 0036h | $V_{CC}$ Max. (write/erase)<br>D7–D4: volt, D3–D0: 100 millivolt |
| 1Dh | 3Ah | 0000h | $V_{PP}$ Min. voltage (00h = no $V_{PP}$ pin present) |
| 1Eh | 3Ch | 0000h | $V_{PP}$ Max. voltage (00h = no $V_{PP}$ pin present) |
| 1Fh | 3Eh | 0003h | Typical timeout per single byte/word write $2^N$ µs |
| 20h | 40h | 0000h | Typical timeout for Min. size buffer write $2^N$ µs (00h = not supported) |
| 21h | 42h | 0009h | Typical timeout per individual block erase $2^N$ ms |
| 22h | 44h | 0000h | Typical timeout for full chip erase $2^N$ ms (00h = not supported) |
| 23h | 46h | 0005h | Max. timeout for byte/word write $2^N$ times typical |
| 24h | 48h | 0000h | Max. timeout for buffer write $2^N$ times typical |
| 25h | 4Ah | 0004h | Max. timeout per individual block erase $2^N$ times typical |
| 26h | 4Ch | 0000h | Max. timeout for full chip erase $2^N$ times typical (00h = not supported) |

**Table 9.3** Device Geometry Definition

| Addresses (Word Mode) | Addresses (Byte Mode) | Data | Description |
|---|---|---|---|
| 27h | 4Eh | 0014h | Device Size = $2^N$ byte |
| 28h<br>29h | 50h<br>52h | 0002h<br>0000h | Flash Device Interface description (refer to CFI publication 100) |
| 2Ah<br>2Bh | 54h<br>56h | 0000h<br>0000h | Max. number of byte in multi-byte write = $2^N$<br>(00h = not supported) |
| 2Ch | 58h | 0004h | Number of Erase Block Regions within device |
| 2Dh<br>2Eh<br>2Fh<br>30h | 5Ah<br>5Ch<br>5Eh<br>60h | 0000h<br>0000h<br>0040h<br>0000h | Erase Block Region 1 Information<br>(refer to the CFI specification or CFI publication 100) |
| 31h<br>32h<br>33h<br>34h | 62h<br>64h<br>66h<br>68h | 0001h<br>0000h<br>0020h<br>0000h | Erase Block Region 2 Information |
| 35h<br>36h<br>37h<br>38h | 6Ah<br>6Ch<br>6Eh<br>70h | 0000h<br>0000h<br>0080h<br>0000h | Erase Block Region 3 Information |
| 39h<br>3Ah<br>3Bh<br>3Ch | 72h<br>74h<br>76h<br>78h | 000Eh<br>0000h<br>0000h<br>0001h | Erase Block Region 4 Information |

**Table 9.4** Primary Vendor-Specific Extended Query (Sheet 1 of 2)

| Addresses (Word Mode) | Addresses (Byte Mode) | Data | Description |
|---|---|---|---|
| 40h<br>41h<br>42h | 80h<br>82h<br>84h | 0050h<br>0052h<br>0049h | Query-unique ASCII string “PRI” |
| 43h | 86h | 0031h | Major version number, ASCII |
| 44h | 88h | 0033h | Minor version number, ASCII |
| 45h | 8Ah | 000Ch | Address Sensitive Unlock<br>0 = Required, 1 = Not Required<br>Process Technology (Bits 5-2)<br>0011b = 0.11 µm Floating Gate NOR |
| 46h | 8Ch | 0002h | Erase Suspend<br>0 = Not Supported, 1 = To Read Only, 2 = To Read & Write |
| 47h | 8Eh | 0001h | Sector Group Protect<br>0 = Not Supported, X= Number of sectors in smallest sector group |
| 48h | 90h | 0001h | Sector Group Temporary Unprotect<br>00 = Not Supported, 01 = Supported |
| 49h | 92h | 0004h | Sector Group Protect/Unprotect scheme<br>01 = 29F040 mode, 02 = 29F016 mode,<br>03 = 29F400 mode, 04 = 29LV800A mode |
| 4Ah | 94h | 0000h | Simultaneous Operation<br>00 = Not Supported, 01 = Supported |
| 4Bh | 96h | 0000h | Burst Mode Type<br>00 = Not Supported, 01 = Supported |
| 4Ch | 98h | 0000h | Page Mode Type<br>00 = Not Supported, 01 = 4 Word Page, 02 = 8 Word Page |
| 4Dh | 9Ah | 0000h | ACC (Acceleration) Supply Minimum<br>00 = Not Supported, D7-D4: Volt, D3-D0: 100mV |
| 4Eh | 9Ch | 0000h | ACC (Acceleration) Supply Maximum<br>00 = Not Supported, D7-D4: Volt, D3-D0: 100mV |

**Table 9.4** Primary Vendor-Specific Extended Query (Sheet 2 of 2)

| Addresses (Word Mode) | Addresses (Byte Mode) | Data | Description |
|---|---|---|---|
| 4Fh | 9Eh | 00XXh | WP# Protection<br>00 = Uniform Device without WP Protect<br>01 = Boot Device with TOP and Bottom WP Protect<br>02 = Bottom Boot Device with WP Protect<br>03 = Top Boot Device with WP Protect<br>04 = Uniform Device with Bottom WP Protect<br>05 = Uniform Device with Top WP Protect<br>06 = Uniform Device with All Sectors WP Protect |
| 50h | A0h | 00XXh | Program Suspend<br>00 = Not Supported, 01 = Supported |

## 9.1 Hardware Data Protection

The command sequence requirement of unlock cycles for programming or erasing provides data protection against inadvertent writes (refer to Table 10.1 on page 32 for command definitions). In addition, the following hardware data protection measures prevent accidental erasure or programming, which might otherwise be caused by spurious system level signals during $V_{CC}$ power-up and power-down transitions, or from system noise.

### 9.1.1 Low $V_{CC}$ Write Inhibit

When $V_{CC}$ is less than $V_{LKO}$, the device does not accept any write cycles. This protects data during $V_{CC}$ power-up and power-down. The command register and all internal program/erase circuits are disabled, and the device resets. Subsequent writes are ignored until $V_{CC}$ is greater than $V_{LKO}$. The system must provide the proper signals to the control pins to prevent unintentional writes when $V_{CC}$ is greater than $V_{LKO}$.

### 9.1.2 Write Pulse Glitch Protection

Noise pulses of less than 5 ns (typical) on OE#, CE# or WE# do not initiate a write cycle.

### 9.1.3 Logical Inhibit

Write cycles are inhibited by holding any one of OE# = $V_{IL}$, CE# = $V_{IH}$ or WE# = $V_{IH}$. To initiate a write cycle, CE# and WE# must be a logical zero while OE# is a logical one.

### 9.1.4 Power-Up Write Inhibit

If WE# = CE# = $V_{IL}$ and OE# = $V_{IH}$ during power up, the device does not accept commands on the rising edge of WE#. The internal state machine is automatically reset to reading array data on power-up.

# 10. Command Definitions

Writing specific address and data commands or sequences into the command register initiates device operations. Table 10.1 on page 32 defines the valid register command sequences. Writing **incorrect address and data values** or writing them in the **improper sequence** resets the device to reading array data.

All addresses are latched on the falling edge of WE# or CE#, whichever happens later. All data is latched on the rising edge of WE# or CE#, whichever happens first. Refer to the appropriate timing diagrams in *AC Characteristics* on page 41.

## 10.1 Reading Array Data

The device is automatically set to reading array data after device power-up. No commands are required to retrieve data. The device is also ready to read array data after completing an Embedded Program or Embedded Erase algorithm.

After the device accepts an Erase Suspend command, the device enters the Erase Suspend mode. The system can read array data using the standard read timings, except that if it reads at an address within erase-suspended sectors, the device outputs status data. After completing a programming operation in the Erase Suspend mode, the system may once again read array data with the same exception. See *Erase Suspend/ Erase Resume Commands* on page 30 for more information on this mode.

The system *must* issue the reset command to re-enable the device for reading array data if DQ5 goes high, or while in the autoselect mode. See *Reset Command* on page 27.

See also *Requirements for Reading Array Data* on page 13 for more information. The *Read Operations* on page 41 provides the read parameters, and Figure 17.1 on page 41 shows the timing diagram.

## 10.2 Reset Command

Writing the reset command to the device resets the device to reading array data. Address bits are don't care for this command.

The reset command may be written between the sequence cycles in an erase command sequence before erasing begins. This resets the device to reading array data. Once erasure begins, however, the device ignores reset commands until the operation is complete.

The reset command may be written between the sequence cycles in a program command sequence before programming begins. This resets the device to reading array data (also applies to programming in Erase Suspend mode). Once programming begins, however, the device ignores reset commands until the operation is complete.

The reset command may be written between the sequence cycles in an autoselect command sequence. Once in the autoselect mode, the reset command *must* be written to return to reading array data (also applies to autoselect during Erase Suspend).

If DQ5 goes high during a program or erase operation, writing the reset command returns the device to reading array data (also applies during Erase Suspend).

## 10.3 Autoselect Command Sequence

The autoselect command sequence allows the host system to access the manufacturer and devices codes, and determine whether or not a sector is protected. Table 10.1 on page 32 shows the address and data requirements. This method is an alternative to that shown in Table 7.6 on page 18, which is intended for PROM programmers and requires $V_{ID}$ on address bit A9.

The autoselect command sequence is initiated by writing two unlock cycles, followed by the autoselect command. The device then enters the autoselect mode, and the system may read at any address any number of times, without initiating another command sequence.

A read cycle at address XX00h retrieves the manufacturer code. A read cycle at address XX01h returns the device code. A read cycle containing a sector address (SA) and the address 02h in word mode (or 04h in byte mode) returns 01h if that sector is protected, or 00h if it is unprotected. Refer to Table 7.2 on page 16 and Table 7.4 on page 17 for valid sector addresses.

The system must write the reset command to exit the autoselect mode and return to reading array data.

## 10.4 Enter Secured Silicon Sector/Exit Secured Silicon Sector Command Sequence

The Secured Silicon Sector region provides a secured data area containing a random, sixteen-byte electronic serial number (ESN). The system can access the Secured Silicon Sector region by issuing the three-cycle Enter Secured Silicon Sector command sequence. The device continues to access the Secured Silicon Sector region until the system issues the four-cycle Exit Secured Silicon Sector command sequence. The Exit Secured Silicon Sector command sequence returns the device to normal operation. Table 10.1 on page 32 shows the addresses and data requirements for both command sequences. Note that the unlock bypass mode is not available when the device enters the Secured Silicon Sector. See also Secured Silicon Sector Flash Memory Region on page 22 for further information.

## 10.5 Word/Byte Program Command Sequence

The system may program the device by word or byte, depending on the state of the BYTE# pin. Programming is a four-bus-cycle operation. The program command sequence is initiated by writing two unlock write cycles, followed by the program set-up command. The program address and data are written next, which in turn initiate the Embedded Program algorithm. The system is *not* required to provide further controls or timings. The device automatically generates the program pulses and verifies the programmed cell margin. Table 10.1 on page 32 shows the address and data requirements for the byte program command sequence.

When the Embedded Program algorithm is complete, the device then returns to reading array data and addresses are no longer latched. The system can determine the status of the program operation by using DQ7, DQ6, or RY/BY#. See *Write Operation Status* on page 33 for information on these status bits.

Any commands written to the device during the Embedded Program Algorithm are ignored. Note that a **hardware reset** immediately terminates the programming operation. The Byte Program command sequence should be reinitiated once the device has reset to reading array data, to ensure data integrity.

Programming is allowed in any sequence and across sector boundaries. **A bit cannot be programmed from a *0* back to a *1*.** Attempting to do so may halt the operation and set DQ5 to *1*, or cause the Data# Polling algorithm to indicate the operation was successful. However, a succeeding read will show that the data is still *0*. Only erase operations can convert a *0* to a *1*.

## 10.6 Unlock Bypass Command Sequence

The unlock bypass feature allows the system to program bytes or words to the device faster than using the standard program command sequence. The unlock bypass command sequence is initiated by first writing two unlock cycles. This is followed by a third write cycle containing the unlock bypass command, 20h. The device then enters the unlock bypass mode. A two-cycle unlock bypass program command sequence is all that is required to program in this mode. The first cycle in this sequence contains the unlock bypass program command, A0h; the second cycle contains the program address and data. Additional data is programmed in the same manner. This mode dispenses with the initial two unlock cycles required in the standard program command sequence, resulting in faster total programming time. Table 10.1 on page 32 shows the requirements for the command sequence.

During the unlock bypass mode, only the Unlock Bypass Program and Unlock Bypass Reset commands are valid. To exit the unlock bypass mode, the system must issue the two-cycle unlock bypass reset command sequence. The first cycle must contain the data 90h; the second cycle the data 00h. Addresses are don't care for both cycles. The device then returns to reading array data.

Figure 10.1 on page 29 illustrates the algorithm for the program operation. See *Erase/Program Operations* on page 44 for parameters, and to Figure 17.5 on page 44 for timing diagrams.

**Figure 10.1** Program Operation

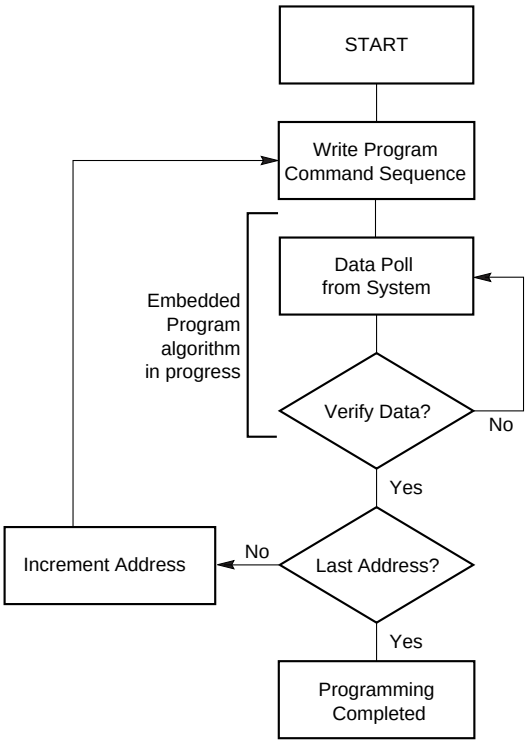


***Note***
*See Table 10.1 on page 32 for program command sequence.*

## 10.7 Chip Erase Command Sequence

Chip erase is a six bus cycle operation. The chip erase command sequence is initiated by writing two unlock cycles, followed by a set-up command. Two additional unlock write cycles are then followed by the chip erase command, which in turn invokes the Embedded Erase algorithm. The device does *not* require the system to preprogram prior to erase. The Embedded Erase algorithm automatically preprograms and verifies the entire memory for an all zero data pattern prior to electrical erase. The system is not required to provide any controls or timings during these operations. Table 10.1 on page 32 shows the address and data requirements for the chip erase command sequence.

Any commands written to the chip during the Embedded Erase algorithm are ignored. Note that a **hardware reset** during the chip erase operation immediately terminates the operation. The Chip Erase command sequence should be reinitiated once the device has returned to reading array data, to ensure data integrity.

The system can determine the status of the erase operation by using DQ7, DQ6, DQ2, or RY/BY#. See *Write Operation Status* on page 33 for information on these status bits. When the Embedded Erase algorithm is complete, the device returns to reading array data and addresses are no longer latched.

Figure 10.2 on page 31 illustrates the algorithm for the erase operation. See *Erase/Program Operations* on page 44 for parameters, and Figure 17.6 on page 45 for timing diagrams.

## 10.8 Sector Erase Command Sequence

Sector erase is a six bus cycle operation. The sector erase command sequence is initiated by writing two unlock cycles, followed by a set-up command. Two additional unlock write cycles are then followed by the address of the sector to be erased, and the sector erase command. Table 10.1 on page 32 shows the address and data requirements for the sector erase command sequence.

The device does *not* require the system to preprogram the memory prior to erase. The Embedded Erase algorithm automatically programs and verifies the sector for an all zero data pattern prior to electrical erase. The system is not required to provide any controls or timings during these operations.

After the command sequence is written, a sector erase time-out of 50 µs begins. During the time-out period, additional sector addresses and sector erase commands may be written. However, these additional erase commands are only one bus cycle long and should be identical to the sixth cycle of the standard erase command explained above. Loading the sector erase buffer may be done in any sequence, and the number of sectors may be from one sector to all sectors. The time between these additional cycles must be less than 50 µs, otherwise the last address and command might not be accepted, and erasure may begin. It is recommended that processor interrupts be disabled during this time to ensure all commands are accepted. The interrupts can be re-enabled after the last Sector Erase command is written. If the time between additional sector erase commands can be assumed to be less than 50 µs, the system need not monitor DQ3. **Any command other than Sector Erase or Erase Suspend during the time-out period resets the device to reading array data.** The system must rewrite the command sequence and any additional sector addresses and commands.

The system can monitor DQ3 to determine if the sector erase timer has timed out. (See *DQ3: Sector Erase Timer* on page 37.) The time-out begins from the rising edge of the final WE# pulse in the command sequence.

Once the sector erase operation has begun, only the Erase Suspend command is valid. All other commands are ignored. Note that a **hardware reset** during the sector erase operation immediately terminates the operation. The Sector Erase command sequence should be reinitiated once the device has returned to reading array data, to ensure data integrity.

When the Embedded Erase algorithm is complete, the device returns to reading array data and addresses are no longer latched. The system can determine the status of the erase operation by using DQ7, DQ6, DQ2, or RY/BY#. (Refer to *Write Operation Status* on page 33 for information on these status bits.)

Figure 10.2 on page 31 illustrates the algorithm for the erase operation. Refer to *Erase/Program Operations* on page 44 for parameters, and to Figure 17.6 on page 45 for timing diagrams.

## 10.9 Erase Suspend/Erase Resume Commands

The Erase Suspend command allows the system to interrupt a sector erase operation and then read data from, or program data to, any sector not selected for erasure. This command is valid only during the sector erase operation, including the 50 µs time-out period during the sector erase command sequence. The Erase Suspend command is ignored if written during the chip erase operation or Embedded Program algorithm. Writing the Erase Suspend command during the Sector Erase time-out immediately terminates the time-out period and suspends the erase operation. Addresses are *don't-cares* when writing the Erase Suspend command.

When the Erase Suspend command is written during a sector erase operation, the device requires a maximum of 35 µs to suspend the erase operation. However, when the Erase Suspend command is written during the sector erase time-out, the device immediately terminates the time-out period and suspends the erase operation.

After the erase operation has been suspended, the system can read array data from or program data to any sector not selected for erasure. (The device "erase suspends" all sectors selected for erasure.) Normal read and write timings and command definitions apply. Reading at any address within erase-suspended sectors produces status data on DQ7–DQ0. The system can use DQ7, or DQ6 and DQ2 together, to determine if a sector is actively erasing or is erase-suspended. See *Write Operation Status* on page 33 for information on these status bits.

After an erase-suspended program operation is complete, the system can once again read array data within non-suspended sectors. The system can determine the status of the program operation using the DQ7 or

DQ6 status bits, just as in the standard program operation. See *Write Operation Status* on page 33 for more information.

The system may also write the autoselect command sequence when the device is in the Erase Suspend mode. The device allows reading autoselect codes even at addresses within erasing sectors, since the codes are not stored in the memory array. When the device exits the autoselect mode, the device reverts to the Erase Suspend mode, and is ready for another valid operation. See *Autoselect Command Sequence* on page 27 for more information.

The system must write the Erase Resume command (address bits are *don't care*) to exit the erase suspend mode and continue the sector erase operation. Further writes of the Resume command are ignored. Another Erase Suspend command can be written after the device has resumed erasing.

**Figure 10.2** Erase Operation

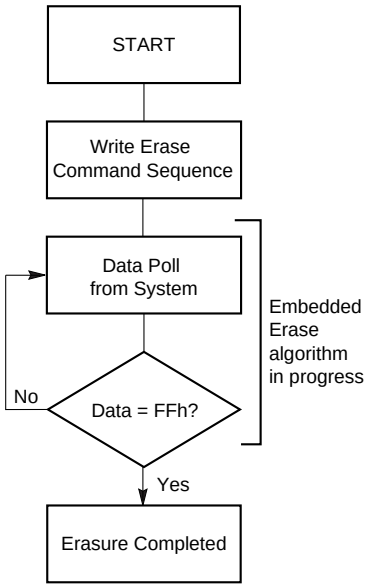


***Notes***

1. *See Table 10.1 on page 32 for erase command sequence.*
2. *See DQ3: Sector Erase Timer on page 37 for more information.*

## 10.10 Command Definitions Table

**Table 10.1** S29AL008J Command Definitions

| Command Sequence (Note 1) | | | Cycles | Bus Cycles (Notes 2–5) | | | | | | | | | | | |
|---|---|---|---|---|---|---|---|---|---|---|---|---|---|---|---|
| | | | | First | | Second | | Third | | Fourth | | Fifth | | Sixth | |
| | | | | Addr | Data | Addr | Data | Addr | Data | Addr | Data | Addr | Data | Addr | Data |
| Read (Note 6) | | | 1 | RA | RD | | | | | | | | | | |
| Reset (Note 7) | | | 1 | XXX | F0 | | | | | | | | | | |
| Autoselect (Note 8) | Manufacturer ID | Word | 4 | 555 | AA | 2AA | 55 | 555 | 90 | X00 | 01 | | | | |
| | | Byte | | AAA | | 555 | | AAA | | | | | | | |
| | Device ID, Top Boot Block | Word | 4 | 555 | AA | 2AA | 55 | 555 | 90 | X01 | 22DA | | | | |
| | | Byte | | AAA | | 555 | | AAA | | X02 | DA | | | | |
| | Device ID, Bottom Boot Block | Word | 4 | 555 | AA | 2AA | 55 | 555 | 90 | X01 | 225B | | | | |
| | | Byte | | AAA | | 555 | | AAA | | X02 | 5B | | | | |
| | Sector Group Protect Verify (Note 9) | Word | 4 | 555 | AA | 2AA | 55 | 555 | 90 | (SA) X02 | XX00 | | | | |
| | | | | | | | | | | | XX01 | | | | |
| | | Byte | | AAA | | 555 | | AAA | | (SA) X04 | 00 | | | | |
| | | | | | | | | | | | 01 | | | | |
| Enter Secured Silicon Sector | | Word | 3 | 555 | AA | 2AA | 55 | 555 | 88 | | | | | | |
| | | Byte | | AAA | | 555 | | AAA | | | | | | | |
| Exit Secured Silicon Sector | | Word | 4 | 555 | AA | 2AA | 55 | 555 | 90 | XXX | 00 | | | | |
| | | Byte | | AAA | | 555 | | AAA | | | | | | | |
| CFI Query (Note 10) | | Word | 1 | 55 | 98 | | | | | | | | | | |
| | | Byte | | AA | | | | | | | | | | | |
| Program | | Word | 4 | 555 | AA | 2AA | 55 | 555 | A0 | PA | PD | | | | |
| | | Byte | | AAA | | 555 | | AAA | | | | | | | |
| Unlock Bypass | | Word | 3 | 555 | AA | 2AA | 55 | 555 | 20 | | | | | | |
| | | Byte | | AAA | | 555 | | AAA | | | | | | | |
| Unlock Bypass Program (Note 11) | | | 2 | XXX | A0 | PA | PD | | | | | | | | |
| Unlock Bypass Reset (Note 12) | | | 2 | XXX | 90 | XXX | 00 | | | | | | | | |
| Chip Erase | | Word | 6 | 555 | AA | 2AA | 55 | 555 | 80 | 555 | AA | 2AA | 55 | 555 | 10 |
| | | Byte | | AAA | | 555 | | AAA | | AAA | | 555 | | AAA | |
| Sector Erase (Note 15) | | Word | 6 | 555 | AA | 2AA | 55 | 555 | 80 | 555 | AA | 2AA | 55 | SA | 30 |
| | | Byte | | AAA | | 555 | | AAA | | AAA | | 555 | | | |
| Erase Suspend (Note 13) | | | 1 | XXX | B0 | | | | | | | | | | |
| Erase Resume (Note 14) | | | 1 | XXX | 30 | | | | | | | | | | |

***Legend***

*X = Don't care*

*RA = Address of the memory location to be read*

*RD = Data read from location RA during read operation.*

*PA = Address of the memory location to be programmed. Addresses latch on the falling edge of the WE# or CE# pulse, whichever happens later.*

*PD = Data to be programmed at location PA. Data latches on the rising edge of WE# or CE# pulse, whichever happens first.*

*SA = Address of the sector to be verified (in autoselect mode) or erased. Address bits A18–A12 uniquely select any sector.*

***Notes***

1. *See Table 7.1 on page 13 for description of bus operations.*
2. *All values are in hexadecimal.*
3. *Except for the read cycle and the fourth cycle of the autoselect command sequence, all bus cycles are write cycles.*
4. *Data bits DQ15–DQ8 are don't cares for unlock and command cycles.*
5. *Address bits A18–A11 are don't cares for unlock and command cycles, unless SA or PA required.*
6. *No unlock or command cycles required when reading array data.*
7. *The Reset command is required to return to reading array data when device is in the autoselect mode, or if DQ5 goes high (while the device is providing status data).*
8. *The fourth cycle of the autoselect command sequence is a read cycle.*
9. *The data is 00h for an unprotected sector and 01h for a protected sector. See "Autoselect Command Sequence" for more information.*
10. *Command is valid when device is ready to read array data or when device is in autoselect mode.*
11. *The Unlock Bypass command is required prior to the Unlock Bypass Program command.*
12. *The Unlock Bypass Reset command is required to return to reading array data when the device is in the unlock bypass mode. F0 is also acceptable.*
13. *The system may read and program in non-erasing sectors, or enter the autoselect mode, when in the Erase Suspend mode. The Erase Suspend command is valid only during a sector erase operation.*
14. *The Erase Resume command is valid only during the Erase Suspend mode.*
15. *Additional sector erase commands during the time-out period after an initial sector erase are one cycle long and identical to the sixth cycle of the sector erase command sequence (SA / 30).*

# 11. Write Operation Status

The device provides several bits to determine the status of a write operation: DQ2, DQ3, DQ5, DQ6, DQ7, and RY/BY#. Table 11.1 on page 37 and the following subsections describe the functions of these bits. DQ7, RY/BY#, and DQ6 each offer a method for determining whether a program or erase operation is complete or in progress. These three bits are discussed first.

## 11.1 DQ7: Data# Polling

The Data# Polling bit, DQ7, indicates to the host system whether an Embedded Algorithm is in progress or completed, or whether the device is in Erase Suspend. Data# Polling is valid after the rising edge of the final WE# pulse in the program or erase command sequence.

During the Embedded Program algorithm, the device outputs on DQ7 the complement of the datum programmed to DQ7. This DQ7 status also applies to programming during Erase Suspend. When the Embedded Program algorithm is complete, the device outputs the datum programmed to DQ7. The system must provide the program address to read valid status information on DQ7. If a program address falls within a protected sector, Data# Polling on DQ7 is active for approximately 1 µs, then the device returns to reading array data.

During the Embedded Erase algorithm, Data# Polling produces a *0* on DQ7. When the Embedded Erase algorithm is complete, or if the device enters the Erase Suspend mode, Data# Polling produces a *1* on DQ7. This is analogous to the complement/true datum output described for the Embedded Program algorithm: the erase function changes all the bits in a sector to *1*; prior to this, the device outputs the *complement*, or *0*. The system must provide an address within any of the sectors selected for erasure to read valid status information on DQ7.

After an erase command sequence is written, if all sectors selected for erasing are protected, Data# Polling on DQ7 is active for approximately 100 µs, then the device returns to reading array data. If not all selected sectors are protected, the Embedded Erase algorithm erases the unprotected sectors, and ignores the selected sectors that are protected.

When the system detects DQ7 has changed from the complement to true data, it can read valid data at DQ7–DQ0 on the *following* read cycles. This is because DQ7 may change asynchronously with DQ0–DQ6 while Output Enable (OE#) is asserted low. Figure 17.8 on page 46, illustrates this.

Table 11.1 on page 37 shows the outputs for Data# Polling on DQ7. Figure 11.2 on page 36 shows the Data# Polling algorithm.

**Figure 11.1** Data# Polling Algorithm

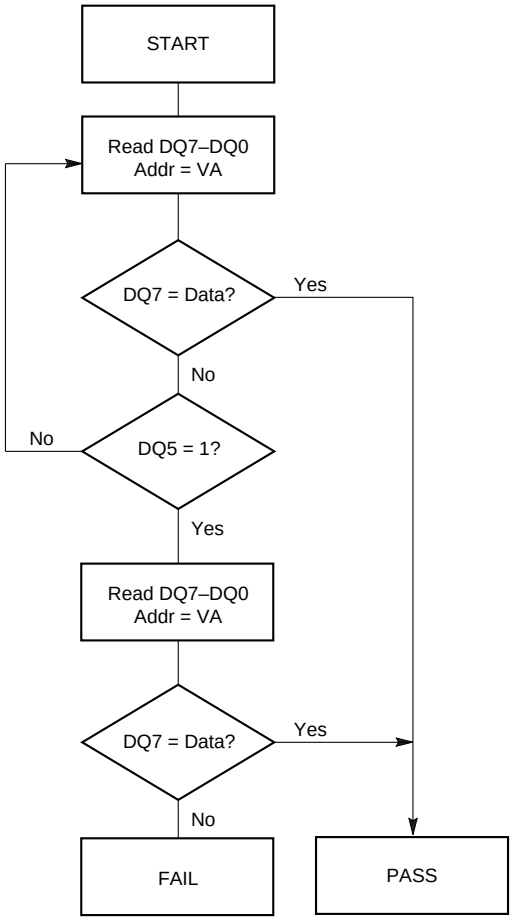


***Notes***

1. *VA = Valid address for programming. During a sector erase operation, a valid address is an address within any sector selected for erasure. During chip erase, a valid address is any non-protected sector address.*
2. *DQ7 should be rechecked even if DQ5 = 1 because DQ7 may change simultaneously with DQ5.*

## 11.2 RY/BY#: Ready/Busy#

The RY/BY# is a dedicated, open-drain output pin that indicates whether an Embedded Algorithm is in progress or complete. The RY/BY# status is valid after the rising edge of the final WE# pulse in the command sequence. Since RY/BY# is an open-drain output, several RY/BY# pins can be tied together in parallel with a pull-up resistor to $V_{CC}$.

If the output is low (Busy), the device is actively erasing or programming. (This includes programming in the Erase Suspend mode.) If the output is high (Ready), the device is ready to read array data (including during the Erase Suspend mode), or is in the standby mode.

Table 11.1 on page 37 shows the outputs for RY/BY#. Figures Figure 17.1 on page 41, Figure 17.2 on page 42, Figure 17.5 on page 44 and Figure 17.6 on page 45 shows RY/BY# for read, reset, program, and erase operations, respectively.

## 11.3 DQ6: Toggle Bit I

Toggle Bit I on DQ6 indicates whether an Embedded Program or Erase algorithm is in progress or complete, or whether the device has entered the Erase Suspend mode. Toggle Bit I may be read at any address, and is valid after the rising edge of the final WE# pulse in the command sequence (prior to the program or erase operation), and during the sector erase time-out.

During an Embedded Program or Erase algorithm operation, successive read cycles to any address cause DQ6 to toggle. (The system may use either OE# or CE# to control the read cycles.) When the operation is complete, DQ6 stops toggling.

After an erase command sequence is written, if all sectors selected for erasing are protected, DQ6 toggles for approximately 100 µs, then returns to reading array data. If not all selected sectors are protected, the Embedded Erase algorithm erases the unprotected sectors, and ignores the selected sectors that are protected.

The system can use DQ6 and DQ2 together to determine whether a sector is actively erasing or is erase-suspended. When the device is actively erasing (that is, the Embedded Erase algorithm is in progress), DQ6 toggles. When the device enters the Erase Suspend mode, DQ6 stops toggling. However, the system must also use DQ2 to determine which sectors are erasing or erase-suspended. Alternatively, the system can use DQ7 (see *DQ7: Data# Polling* on page 33).

If a program address falls within a protected sector, DQ6 toggles for approximately 1 µs after the program command sequence is written, then returns to reading array data.

DQ6 also toggles during the erase-suspend-program mode, and stops toggling once the Embedded Program algorithm is complete.

Table 11.1 on page 37 shows the outputs for Toggle Bit I on DQ6. Figure 11.2 on page 36 shows the toggle bit algorithm in flowchart form, and *Reading Toggle Bits DQ6/DQ2* on page 36 explains the algorithm. Figure 17.9 on page 46 shows the toggle bit timing diagrams. Figure 17.10 on page 46 shows the differences between DQ2 and DQ6 in graphical form. See also the subsection on *DQ2: Toggle Bit II* on page 35.

## 11.4 DQ2: Toggle Bit II

The “Toggle Bit II” on DQ2, when used with DQ6, indicates whether a particular sector is actively erasing (that is, the Embedded Erase algorithm is in progress), or whether that sector is erase-suspended. Toggle Bit II is valid after the rising edge of the final WE# pulse in the command sequence.

DQ2 toggles when the system reads at addresses within those sectors that have been selected for erasure. (The system may use either OE# or CE# to control the read cycles.) But DQ2 cannot distinguish whether the sector is actively erasing or is erase-suspended. DQ6, by comparison, indicates whether the device is actively erasing, or is in Erase Suspend, but cannot distinguish which sectors are selected for erasure. Thus, both status bits are required for sector and mode information. Refer to Table 11.1 on page 37 to compare outputs for DQ2 and DQ6.

Figure 11.2 on page 36 shows the toggle bit algorithm in flowchart form, and the section *Reading Toggle Bits DQ6/DQ2* on page 36 explains the algorithm. See also the *DQ6: Toggle Bit I* on page 35 subsection. Figure 17.9 on page 46 shows the toggle bit timing diagram. Figure 17.10 on page 46 shows the differences between DQ2 and DQ6 in graphical form.

## 11.5 Reading Toggle Bits DQ6/DQ2

Refer to Figure 11.2 on page 36 for the following discussion. Whenever the system initially begins reading toggle bit status, it must read DQ7–DQ0 at least twice in a row to determine whether a toggle bit is toggling. Typically, the system would note and store the value of the toggle bit after the first read. After the second read, the system would compare the new value of the toggle bit with the first. If the toggle bit is not toggling, the device has completed the program or erase operation. The system can read array data on DQ7–DQ0 on the following read cycle.

However, if after the initial two read cycles, the system determines that the toggle bit is still toggling, the system also should note whether the value of DQ5 is high (see the section on DQ5). If it is, the system should then determine again whether the toggle bit is toggling, since the toggle bit may have stopped toggling just as DQ5 went high. If the toggle bit is no longer toggling, the device has successfully completed the program or erase operation. If it is still toggling, the device did not complete the operation successfully, and the system must write the reset command to return to reading array data.

The remaining scenario is that the system initially determines that the toggle bit is toggling and DQ5 has not gone high. The system may continue to monitor the toggle bit and DQ5 through successive read cycles, determining the status as described in the previous paragraph. Alternatively, it may choose to perform other system tasks. In this case, the system must start at the beginning of the algorithm when it returns to determine the status of the operation (top of Figure 11.2 on page 36).

**Figure 11.2** Toggle Bit Algorithm

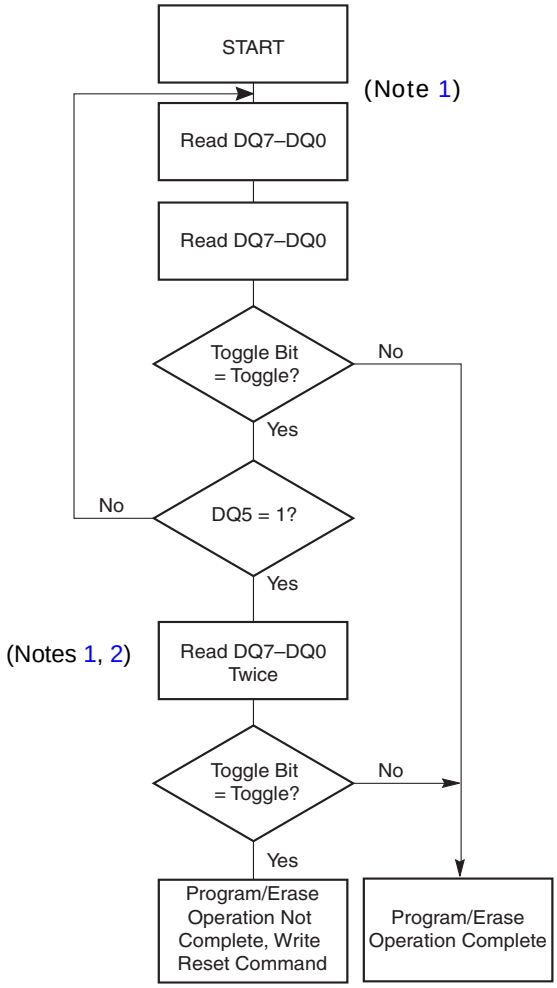


***Notes***

1. *Read toggle bit twice to determine whether or not it is toggling. See text.*
2. *Recheck toggle bit because it may stop toggling as DQ5 changes to 1. See text.*

## 11.6 DQ5: Exceeded Timing Limits

DQ5 indicates whether the program or erase time has exceeded a specified internal pulse count limit. Under these conditions DQ5 produces a *1*. This is a failure condition that indicates the program or erase cycle was not successfully completed.

The DQ5 failure condition may appear if the system tries to program a *1* to a location that is previously programmed to *0*. **Only an erase operation can change a *0* back to a *1*.** Under this condition, the device halts the operation, and when the operation has exceeded the timing limits, DQ5 produces a *1*.

Under both these conditions, the system must issue the reset command to return the device to reading array data.

## 11.7 DQ3: Sector Erase Timer

After writing a sector erase command sequence, the system may read DQ3 to determine whether or not an erase operation has begun. (The sector erase timer does not apply to the chip erase command.) If additional sectors are selected for erasure, the entire time-out also applies after each additional sector erase command. When the time-out is complete, DQ3 switches from *0* to *1*. The system may ignore DQ3 if the system can guarantee that the time between additional sector erase commands will always be less than 50 µs. See also *Sector Erase Command Sequence* on page 30.

After the sector erase command sequence is written, the system should read the status on DQ7 (Data# Polling) or DQ6 (Toggle Bit I) to ensure the device has accepted the command sequence, and then read DQ3. If DQ3 is *1*, the internally controlled erase cycle has begun; all further commands (other than Erase Suspend) are ignored until the erase operation is complete. If DQ3 is *0*, the device will accept additional sector erase commands. To ensure the command has been accepted, the system software should check the status of DQ3 prior to and following each subsequent sector erase command. If DQ3 is high on the second status check, the last command might not have been accepted. Table 11.1 shows the outputs for DQ3.

**Table 11.1** Write Operation Status

| Operation | | DQ7 (Note 2) | DQ6 | DQ5 (Note 1) | DQ3 | DQ2 (Note 2) | RY/BY# |
|---|---|---|---|---|---|---|---|
| Standard Mode | Embedded Program Algorithm | DQ7# | Toggle | 0 | N/A | No toggle | 0 |
| | Embedded Erase Algorithm | 0 | Toggle | 0 | 1 | Toggle | 0 |
| Erase Suspend Mode | Reading within Erase Suspended Sector | 1 | No toggle | 0 | N/A | Toggle | 1 |
| | Reading within Non-Erase Suspended Sector | Data | Data | Data | Data | Data | 1 |
| | Erase-Suspend-Program | DQ7# | Toggle | 0 | N/A | N/A | 0 |

***Notes***

1. *DQ5 switches to* 1 *when an Embedded Program or Embedded Erase operation has exceeded the maximum timing limits. See DQ5: Exceeded Timing Limits on page 37 for more information.*
2. *DQ7 and DQ2 require a valid address when reading status information. Refer to the appropriate subsection for further details.*

# 12. Absolute Maximum Ratings

| Parameter | Rating |
|---|---|
| Storage Temperature Plastic Packages | –65° C to +150° C |
| Ambient Temperature with Power Applied | –65° C to +125° C |
| Voltage with Respect to Ground | |
| $V_{CC}$ (Note 1) | –0.5 V to +4.0 V |
| A9, OE#, and RESET# (Note 2) | –0.5 V to +12.5 V |
| All other pins (Note 1) | –0.5 V to $V_{CC}$+0.5 V |
| Output Short Circuit Current (Note 3) | 200 mA |

***Notes***

1. *Minimum DC voltage on input or I/O pins is –0.5 V. During voltage transitions, input or I/O pins may overshoot $V_{SS}$ to –2.0 V for periods of up to 20 ns. See Figure 13.1 on page 38. Maximum DC voltage on input or I/O pins is $V_{CC}$ +0.5 V. During voltage transitions, input or I/O pins may overshoot to $V_{CC}$ +2.0 V for periods up to 20 ns. See Figure 13.2 on page 38.*
2. *Minimum DC input voltage on pins A9, OE#, and RESET# is -0.5 V. During voltage transitions, A9, OE#, and RESET# may overshoot $V_{SS}$ to –2.0 V for periods of up to 20 ns. See Figure 13.1 on page 38. Maximum DC input voltage on pin A9 is +12.5 V which may overshoot to 14.0 V for periods up to 20 ns.*
3. *No more than one output may be shorted to ground at a time. Duration of the short circuit should not be greater than one second.*
4. *Stresses above those listed under* Absolute Maximum Ratings *may cause permanent damage to the device. This is a stress rating only; functional operation of the device at these or any other conditions above those indicated in the operational sections of this data sheet is not implied. Exposure of the device to absolute maximum rating conditions for extended periods may affect device reliability.*

# 13. Operating Ranges

| Parameter | | Range |
|---|---|---|
| Ambient Temperature | Industrial (I) Devices | –40° C to +85° C |
| | Extended (N) Devices | –40°C to +125°C |
| $V_{CC}$ Supply Voltages | Full | 2.7 V to 3.6 V |
| | Regulated | 3.0 V to 3.6 V |

***Note***

*Operating ranges define those limits between which the functionality of the device is guaranteed.*

**Figure 13.1** Maximum Negative Overshoot Waveform

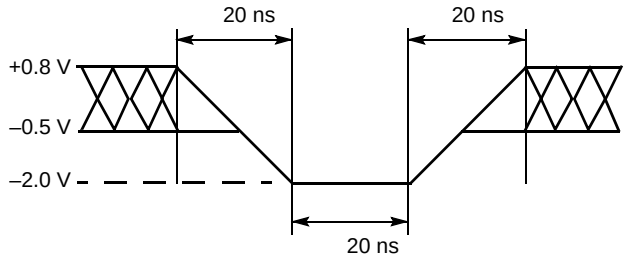


**Figure 13.2** Maximum Positive Overshoot Waveform

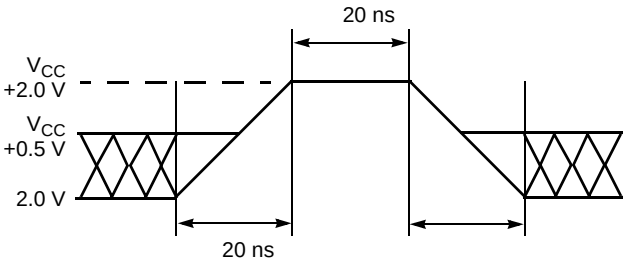

# 14. DC Characteristics

## 14.1 CMOS Compatible

| Parameter | Description | Test Conditions | | Min | Typ | Max | Unit |
|---|---|---|---|---|---|---|---|
| $I_{LI}$ | Input Load Current | $V_{IN} = V_{SS}$ to $V_{CC}$, $V_{CC} = V_{CC\ max}$ | | | | ±1.0 | µA |
| | WP# Input Load Current | $V_{CC} = V_{CC\ max}$, WP# = $V_{SS}$ to $V_{CC}$ | | | | ±25 | |
| $I_{LIT}$ | A9 Input Load Current | $V_{CC} = V_{CC\ max}$; A9 = 12.5 V | | | | 35 | |
| $I_{LO}$ | Output Leakage Current | $V_{OUT} = V_{SS}$ to $V_{CC}$, $V_{CC} = V_{CC\ max}$ | | | | ±1.0 | |
| $I_{CC1}$ | $V_{CC}$ Active Read Current (Note 1) | CE# = $V_{IL}$, OE# = $V_{IH}$, $V_{CC} = V_{CC\ max}$, Byte Mode | 5 MHz | | 7 | 12 | mA |
| | | | 1 MHz | | 2 | 4 | |
| | | CE# = $V_{IL}$, OE# = $V_{IH}$, $V_{CC} = V_{CC\ max}$, Word Mode | 5 MHz | | 7 | 12 | |
| | | | 1 MHz | | 2 | 4 | |
| $I_{CC2}$ | $V_{CC}$ Active Erase/Program Current (Notes 2, 3, 4) | CE# = $V_{IL}$, OE# = $V_{IH}$, $V_{CC} = V_{CC\ max}$ | | | 20 | 30 | mA |
| $I_{CC3}$ | $V_{CC}$ Standby Current (Note 4) | OE# = $V_{IH}$, CE#, RESET# = $V_{CC}$ ±0.3 V/-0.1V, WP# = $V_{CC}$ or open, $V_{CC} = V_{CC\ max}$ (Note 5) | | | 0.2 | 5 | µA |
| $I_{CC4}$ | $V_{CC}$ Standby Current During Reset (Note 4) | $V_{CC} = V_{CC\ max}$; RESET# = $V_{SS}$ ±0.3 V/-0.1V WP# = $V_{CC}$ or open, (Note 5) | | | 0.2 | 5 | µA |
| $I_{CC5}$ | Automatic Sleep Mode (Notes 3, 4) | $V_{CC} = V_{CC\ max}$, $V_{IH} = V_{CC}$ ±0.3 V, $V_{IL} = V_{SS}$ ±0.3 V/-0.1 V, WP# = $V_{CC}$ or open, (Note 5) | | | 0.2 | 5 | µA |
| $V_{IL}$ | Input Low Voltage | | | -0.1 | | 0.8 | V |
| $V_{IH}$ | Input High Voltage | | | 0.7 x $V_{CC}$ | | $V_{CC}$ + 0.3 | |
| $V_{ID}$ | Voltage for Autoselect and Temporary Sector Unprotect | $V_{CC}$ = 2.7–3.6 V | | 8.5 | | 12.5 | |
| $V_{OL}$ | Output Low Voltage | $I_{OL}$ = 4.0 mA, $V_{CC} = V_{CC\ min}$ | | | | 0.45 | |
| $V_{OH1}$ | Output High Voltage | $I_{OH}$ = -2.0 mA, $V_{CC} = V_{CC\ min}$ | | 0.85 x $V_{CC}$ | | | |
| $V_{OH2}$ | | $I_{OH}$ = -100 µA, $V_{CC} = V_{CC\ min}$ | | $V_{CC}$–0.4 | | | |
| $V_{LKO}$ | Low $V_{CC}$ Lock-Out Voltage | | | 2.1 | | 2.5 | |

***Notes***

1. *The $I_{CC}$ current listed is typically less than 2 mA/MHz, with OE# at $V_{IH}$. Typical $V_{CC}$ is 3.0 V.*
2. *$I_{CC}$ active while Embedded Erase or Embedded Program is in progress.*
3. *Automatic sleep mode enables the low power mode when addresses remain stable for $t_{ACC}$ + 30 ns.*
4. *Not 100% tested.*
5. *When device operated in Extended Temperature range, the currents shall be as follows:*

   *$I_{CC3}$ = 0.2 µA (typ), 10 µA (max)*
   *$I_{CC4}$ = 0.2 µA (typ), 10 µA (max)*
   *$I_{CC5}$ = 0.2 µA (typ), 10 µA (max)*

# 15. Test Conditions

**Figure 15.1** Test Setup

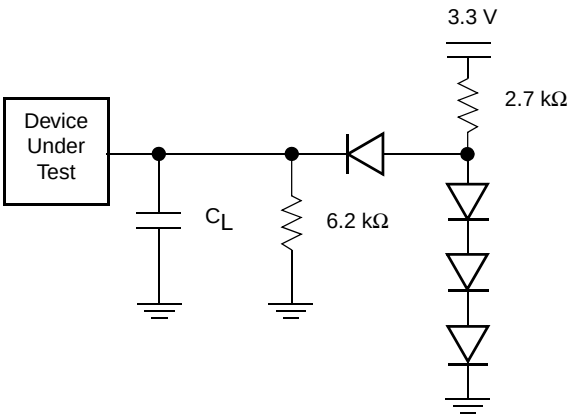


***Note***
*Diodes are IN3064 or equivalent.*

**Table 15.1** Test Specifications

| Test Condition | 70 | 55 | Unit |
|---|---|---|---|
| Output Load | 1 TTL gate | | |
| Output Load Capacitance, $C_L$ (including jig capacitance) | 30 | | pF |
| Input Rise and Fall Times | 5 | | ns |
| Input Pulse Levels | 0.0 or $V_{CC}$ | | V |
| Input timing measurement reference levels | 0.5 $V_{CC}$ | | |
| Output timing measurement reference levels | 0.5 $V_{CC}$ | | |

# 16. Key to Switching Waveforms

| Waveform | Inputs | Outputs |
|---|---|---|
| | Steady | |
| | Changing from H to L | |
| | Changing from L to H | |
| | Don't Care, Any Change Permitted | Changing, State Unknown |
| | Does Not Apply | Center Line is High Impedance State (High Z) |

**Figure 16.1** Input Waveforms and Measurement Levels

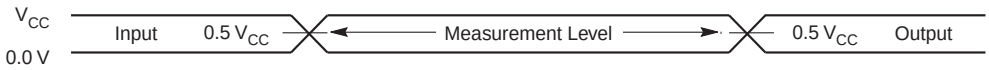

# 17. AC Characteristics

## 17.1 Read Operations

| Parameter | | Description | | Test Setup | | Speed Options | | Unit |
|---|---|---|---|---|---|---|---|---|
| JEDEC | Std | | | | | 55 | 70 | |
| $t_{AVAV}$ | $t_{RC}$ | Read Cycle Time (Note 1) | | | Min | 55 | 70 | ns |
| $t_{AVQV}$ | $t_{ACC}$ | Address to Output Delay | | CE# = $V_{IL}$<br>OE# = $V_{IL}$ | Max | 55 | 70 | |
| $t_{ELQV}$ | $t_{CE}$ | Chip Enable to Output Delay | | OE# = $V_{IL}$ | Max | 55 | 70 | |
| $t_{GLQV}$ | $t_{OE}$ | Output Enable to Output Delay | | | Max | 30 | 30 | |
| $t_{EHQZ}$ | $t_{DF}$ | Chip Enable to Output High Z (Note 1) | | | Max | 16 | | |
| $t_{GHQZ}$ | $t_{DF}$ | Output Enable to Output High Z (Note 1) | | | Max | 16 | | |
| | $t_{SR/W}$ | Latency Between Read and Write Operations | | | Min | 20 | | |
| | $t_{OEH}$ | Output Enable Hold Time (Note 1) | Read | | Min | 0 | | |
| | | | Toggle and Data# Polling | | Min | 10 | | |
| $t_{AXQX}$ | $t_{OH}$ | Output Hold Time From Addresses, CE# or OE#, Whichever Occurs First (Note 1) | | | Min | 0 | | |

***Notes***

1. *Not 100% tested.*
2. *See Figure 15.1 on page 40 and Table 15.1 on page 40 for test specifications.*

**Figure 17.1** Read Operations Timings

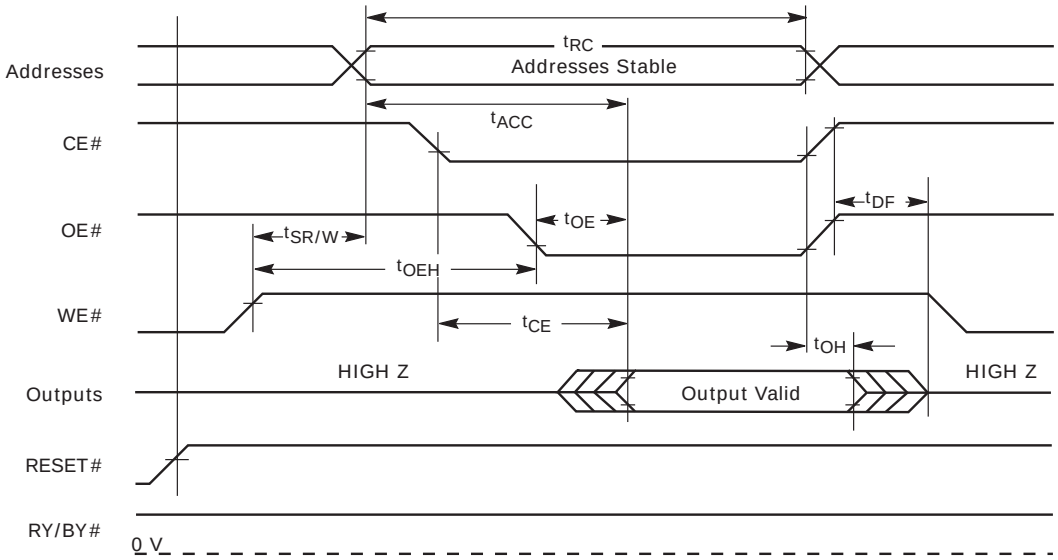

## 17.2 Hardware Reset (RESET#)

| Parameter | | Description | Test Setup | All Speed Options | Unit |
|---|---|---|---|---|---|
| JEDEC | Std | | | | |
| | $t_{READY}$ | RESET# Pin Low (During Embedded Algorithms) to Read or Write (See Note) | Max | 35 | µs |
| | $t_{READY}$ | RESET# Pin Low (NOT During Embedded Algorithms) to Read or Write (See Note) | Max | 500 | ns |
| | $t_{RP}$ | RESET# Pulse Width | Min | 500 | |
| | $t_{RH}$ | RESET# High Time Before Read (See Note) | | 50 | |
| | $t_{RPD}$ | RESET# Low to Standby Mode | | 35 | µs |
| | $t_{RB}$ | RY/BY# Recovery Time | | 0 | ns |

***Note***
*Not 100% tested.*

**Figure 17.2** RESET# Timings

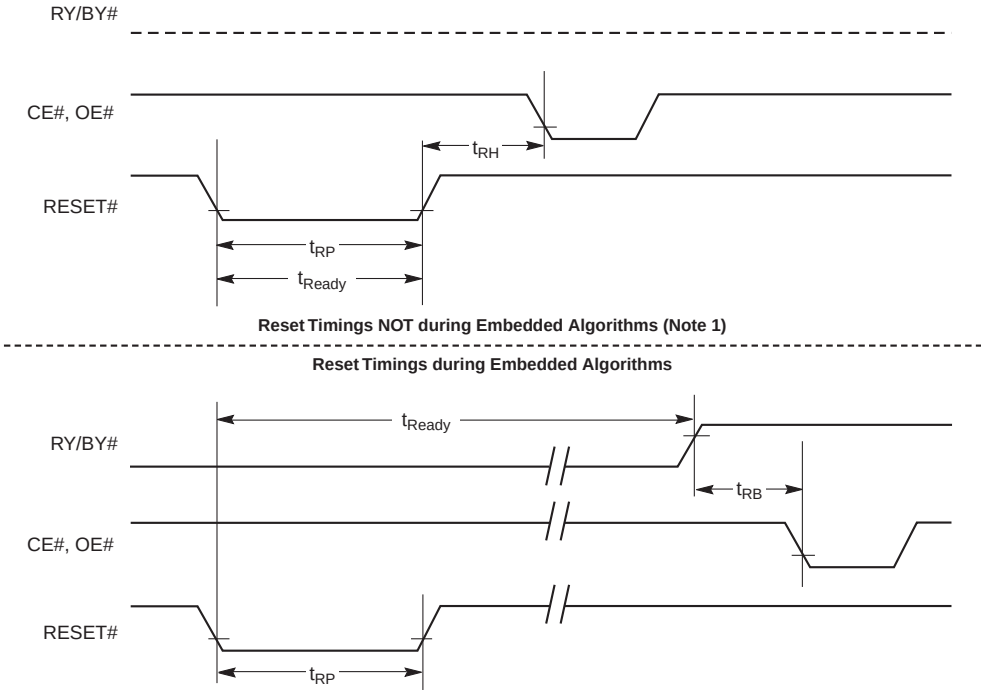


***Note***
1. *CE# should only go low after RESET# has gone high. Keeping CE# low from power up through the first read could cause the first read to retrieve erroneous data.*

## 17.3 Word/Byte Configuration (BYTE#)

| Parameter | | Description | | Speed Options | | Unit |
|---|---|---|---|---|---|---|
| JEDEC | Std | | | 55 | 70 | |
| | $t_{ELFL}/t_{ELFH}$ | CE# to BYTE# Switching Low or High | Max | 5 | | ns |
| | $t_{FLQZ}$ | BYTE# Switching Low to Output HIGH Z | Max | 16 | | |
| | $t_{FHQV}$ | BYTE# Switching High to Output Active | Min | 55 | 70 | |

**Figure 17.3** BYTE# Timings for Read Operations

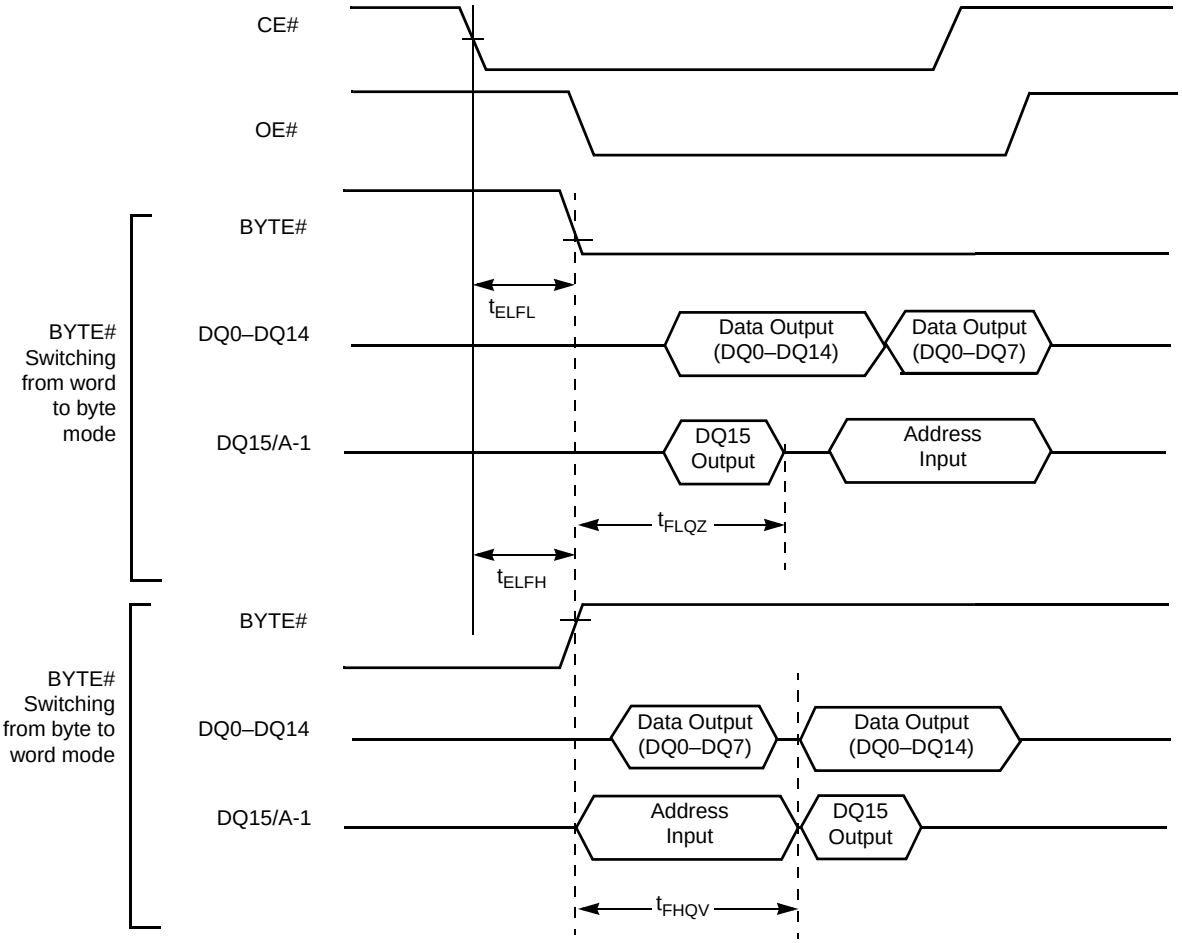


**Figure 17.4** BYTE# Timings for Write Operations

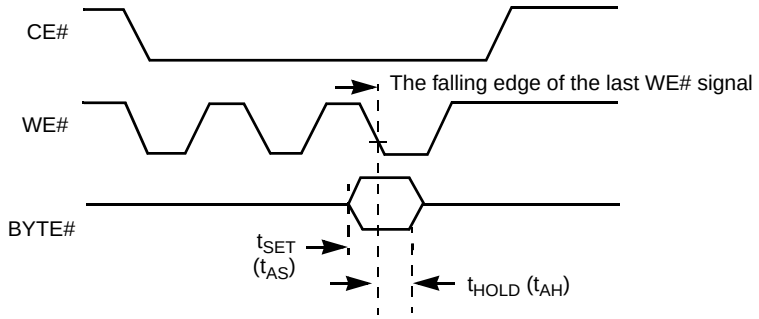


***Note***
*Refer to the Erase/Program Operations table for $t_{AS}$ and $t_{AH}$ specifications.*

## 17.4 Erase/Program Operations

| Parameter | | Description | | | Speed Options | | Unit |
|---|---|---|---|---|---|---|---|
| JEDEC | Std | | | | 55 | 70 | |
| $t_{AVAV}$ | $t_{WC}$ | Write Cycle Time (Note 1) | | Min | 55 | 70 | ns |
| $t_{AVWL}$ | $t_{AS}$ | Address Setup Time | | Min | 0 | | ns |
| $t_{WLAX}$ | $t_{AH}$ | Address Hold Time | | Min | 45 | | ns |
| $t_{DVWH}$ | $t_{DS}$ | Data Setup Time | | Min | 35 | 35 | ns |
| $t_{WHDX}$ | $t_{DH}$ | Data Hold Time | | Min | 0 | | ns |
| | $t_{OES}$ | Output Enable Setup Time | | Min | 0 | | ns |
| $t_{GHWL}$ | $t_{GHWL}$ | Read Recovery Time Before Write (OE# High to WE# Low) | | Min | 0 | | ns |
| $t_{ELWL}$ | $t_{CS}$ | CE# Setup Time | | Min | 0 | | ns |
| $t_{WHEH}$ | $t_{CH}$ | CE# Hold Time | | Min | 0 | | ns |
| $t_{WLWH}$ | $t_{WP}$ | Write Pulse Width | | Min | 35 | 35 | ns |
| $t_{WHWL}$ | $t_{WPH}$ | Write Pulse Width High | | Min | 25 | | ns |
| | $t_{SR/W}$ | Latency Between Read and Write Operations | | Min | 20 | | ns |
| $t_{WHWH1}$ | $t_{WHWH1}$ | Programming Operation (Note 2) | Byte | Typ | 6 | | µs |
| | | | Word | Typ | 6 | | |
| $t_{WHWH2}$ | $t_{WHWH2}$ | Sector Erase Operation (Note 2) | | Typ | 0.5 | | sec |
| | $t_{VCS}$ | $V_{CC}$ Setup Time (Note 1) | | Min | 50 | | µs |
| | $t_{RB}$ | Recovery Time from RY/BY# | | Min | 0 | | ns |
| | $t_{BUSY}$ | Program/Erase Valid to RY/BY# Delay | | Max | 90 | | |

***Notes***

1. *Not 100% tested.*
2. *See Erase and Programming Performance on page 49 for more information.*

**Figure 17.5** Program Operation Timings

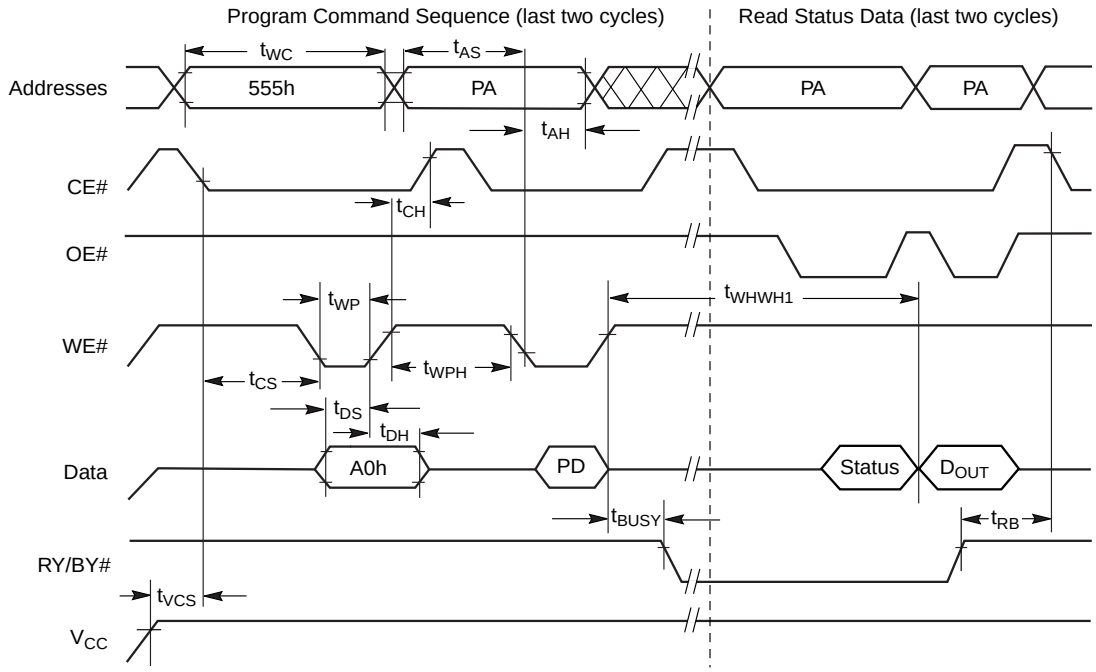


***Notes***

1. *PA = program address, PD = program data, $D_{OUT}$ is the true data at the program address.*
2. *Illustration shows device in word mode.*

**Figure 17.6** Chip/Sector Erase Operation Timings

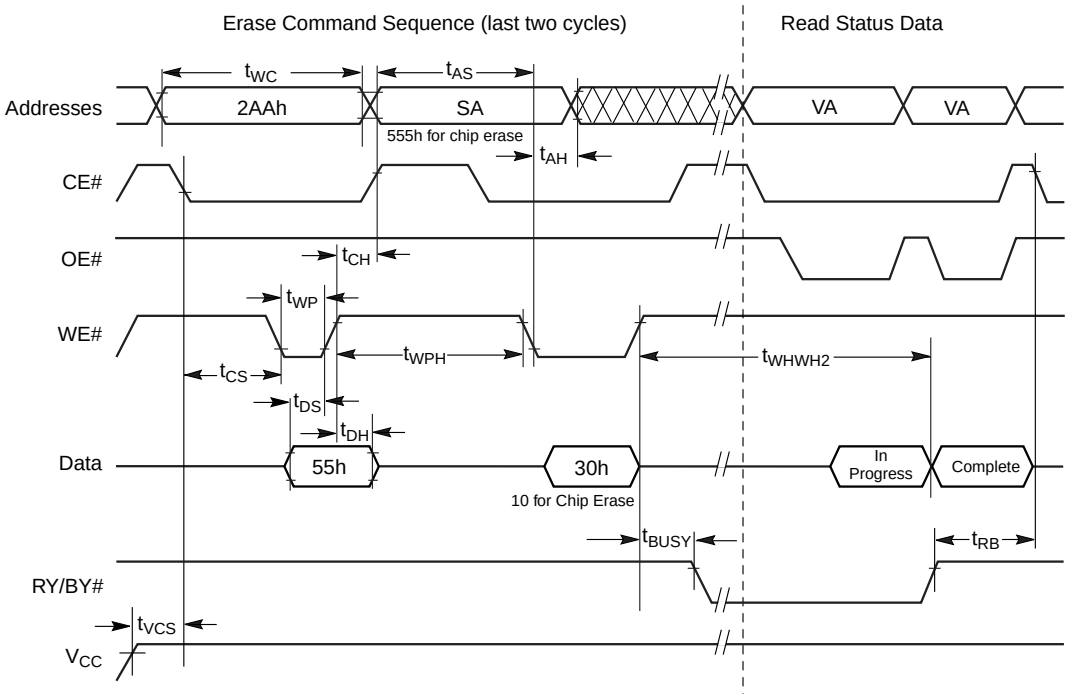


***Notes***

1. *SA = sector address (for Sector Erase), VA = Valid Address for reading status data (see Write Operation Status on page 33).*
2. *Illustration shows device in word mode.*

**Figure 17.7** Back to Back Read/Write Cycle Timing

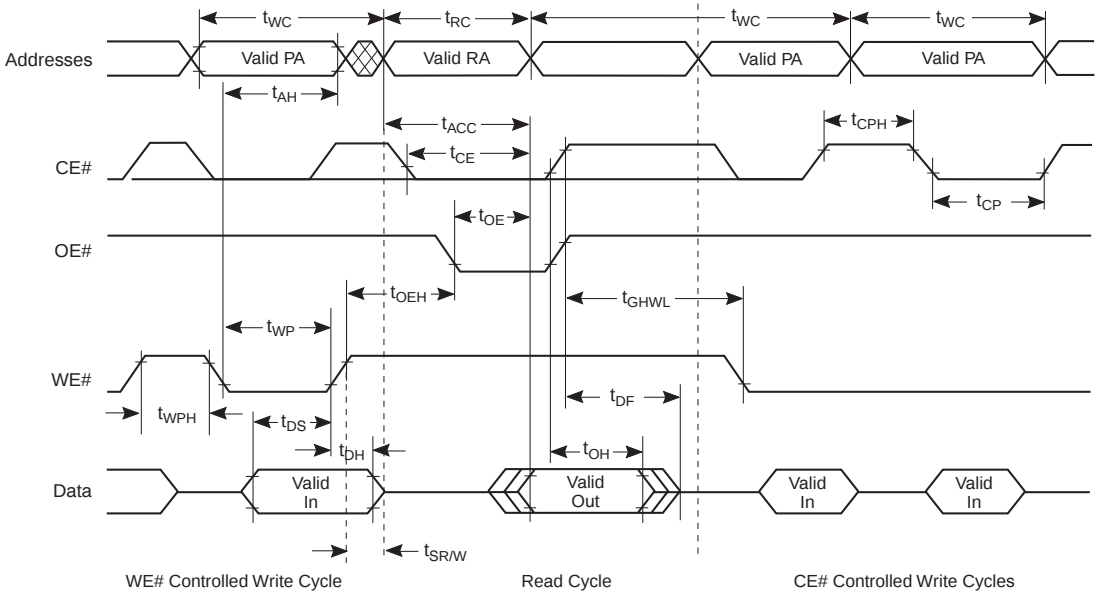

**Figure 17.8** Data# Polling Timings (During Embedded Algorithms)

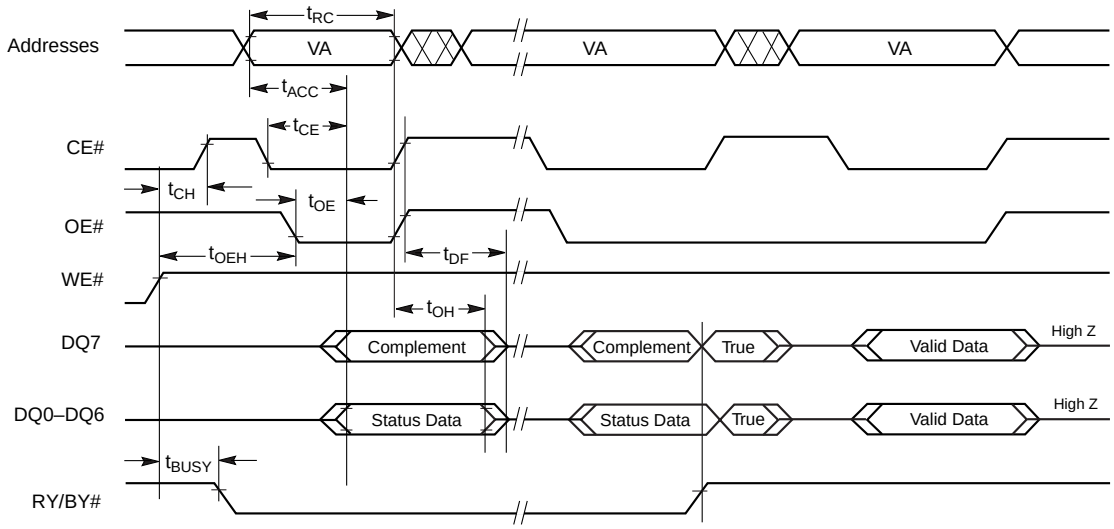


***Note***
*VA = Valid address. Illustration shows first status cycle after command sequence, last status read cycle, and array data read cycle.*

**Figure 17.9** Toggle Bit Timings (During Embedded Algorithms)

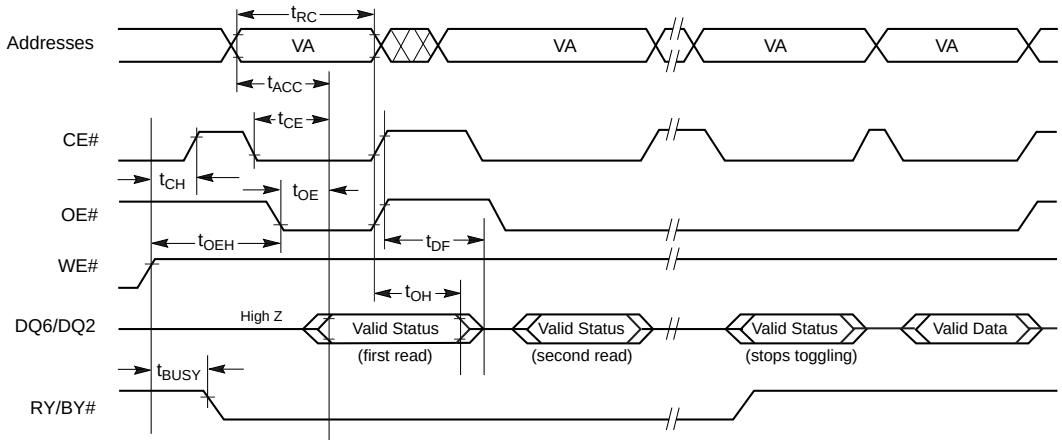


***Note***
*VA = Valid address; not required for DQ6. Illustration shows first two status cycle after command sequence, last status read cycle, and array data read cycle.*

**Figure 17.10** DQ2 vs. DQ6 for Erase and Erase Suspend Operations

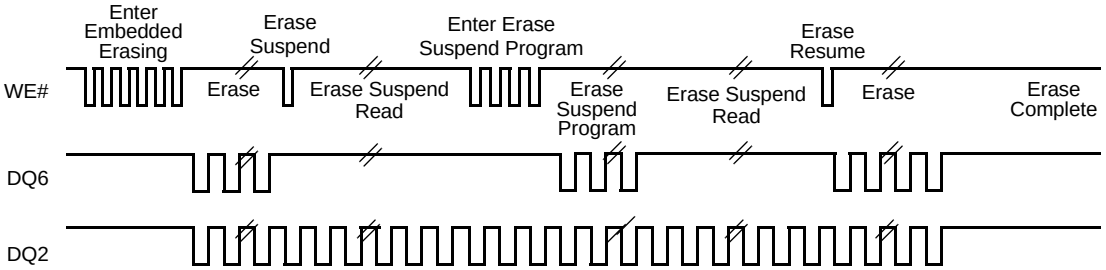


***Note***
*The system may use CE# or OE# to toggle DQ2 and DQ6. DQ2 toggles only when read at an address within an erase-suspended sector.*

## 17.5 Temporary Sector Group Unprotect

| Parameter | | | | | |
|---|---|---|---|---|---|
| JEDEC | Std | Description | | All Speed Options | Unit |
| | $t_{VIDR}$ | $V_{ID}$ Rise and Fall Time (See Note) | Min | 500 | ns |
| | $t_{RSP}$ | RESET# Setup Time for Temporary Sector Unprotect | Min | 4 | µs |
| | $t_{RRB}$ | RESET# Hold Time from RY/BY# High for Temporary Sector Unprotect | Min | 4 | µs |

***Note***
*Not 100% tested.*

**Figure 17.11** Temporary Sector Group Unprotect/Timing Diagram

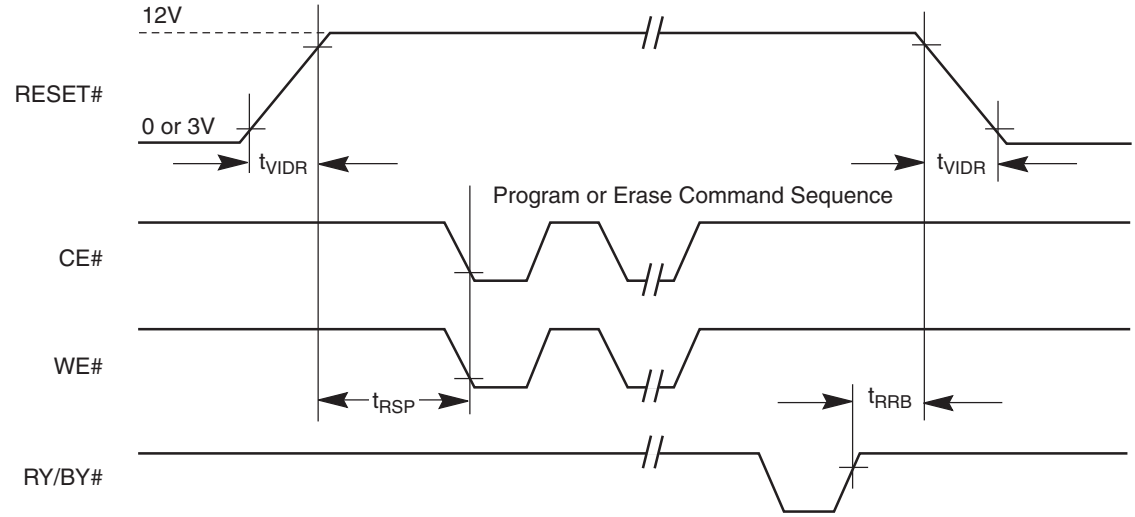


**Figure 17.12** Sector Group Protect/Unprotect Timing Diagram

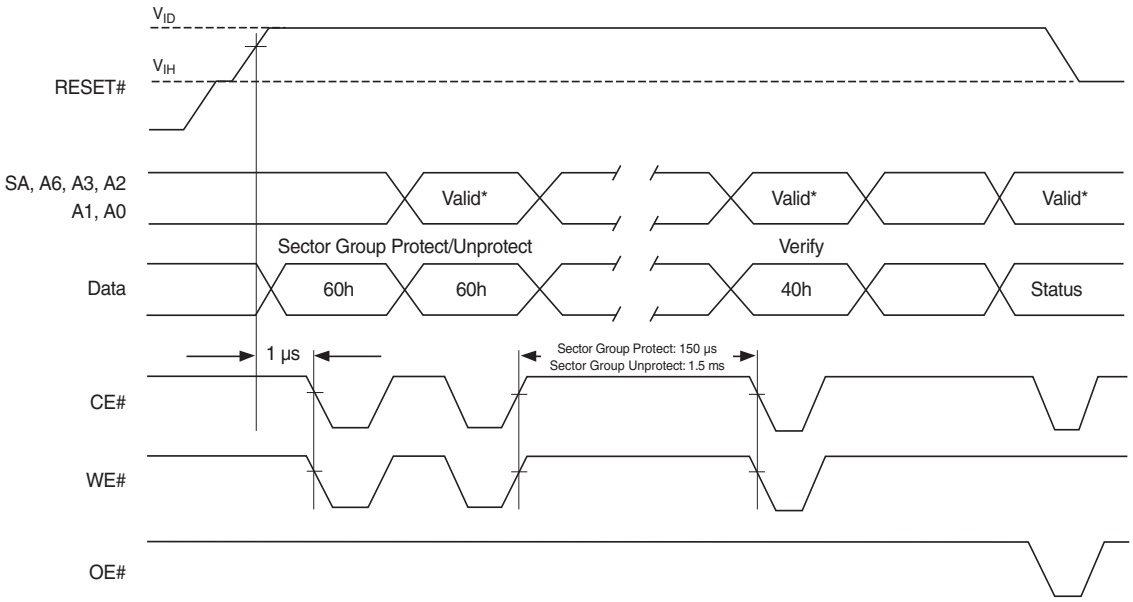


***Note***
*For sector group protect, A6 = 0, A3 = A2 = 0, A1 = 1, A0 = 0. For sector unprotect, A6 = 1, A3 = A2 = 0, A1 = 1, A0 = 0.*

## 17.6 Alternate CE# Controlled Erase/Program Operations

| Parameter | | | | | Speed Options | | |
|---|---|---|---|---|---|---|---|
| JEDEC | Std | Description | | | 55 | 70 | Unit |
| $t_{AVAV}$ | $t_{WC}$ | Write Cycle Time (Note 1) | | Min | 55 | 70 | ns |
| $t_{AVEL}$ | $t_{AS}$ | Address Setup Time | | Min | 0 | | ns |
| $t_{ELAX}$ | $t_{AH}$ | Address Hold Time | | Min | 45 | | ns |
| $t_{DVEH}$ | $t_{DS}$ | Data Setup Time | | Min | 35 | 35 | ns |
| $t_{EHDX}$ | $t_{DH}$ | Data Hold Time | | Min | 0 | | ns |
| | $t_{OES}$ | Output Enable Setup Time | | Min | 0 | | ns |
| $t_{GHEL}$ | $t_{GHEL}$ | Read Recovery Time Before Write (OE# High to WE# Low) | | Min | 0 | | ns |
| $t_{WLEL}$ | $t_{WS}$ | WE# Setup Time | | Min | 0 | | ns |
| $t_{EHWH}$ | $t_{WH}$ | WE# Hold Time | | Min | 0 | | ns |
| $t_{ELEH}$ | $t_{CP}$ | CE# Pulse Width | | Min | 35 | 35 | ns |
| $t_{EHEL}$ | $t_{CPH}$ | CE# Pulse Width High | | Min | 25 | | ns |
| | $t_{SR/W}$ | Latency Between Read and Write Operations | | Min | 20 | | ns |
| $t_{WHWH1}$ | $t_{WHWH1}$ | Programming Operation (Note 2) | Byte | Typ | 6 | | µs |
| | | | Word | Typ | 6 | | |
| $t_{WHWH2}$ | $t_{WHWH2}$ | Sector Erase Operation (Note 2) | | Typ | 0.5 | | sec |

***Notes***

1. *Not 100% tested.*
2. *See Erase and Programming Performance on page 49 for more information.*

**Figure 17.13** Alternate CE# Controlled Write Operation Timings

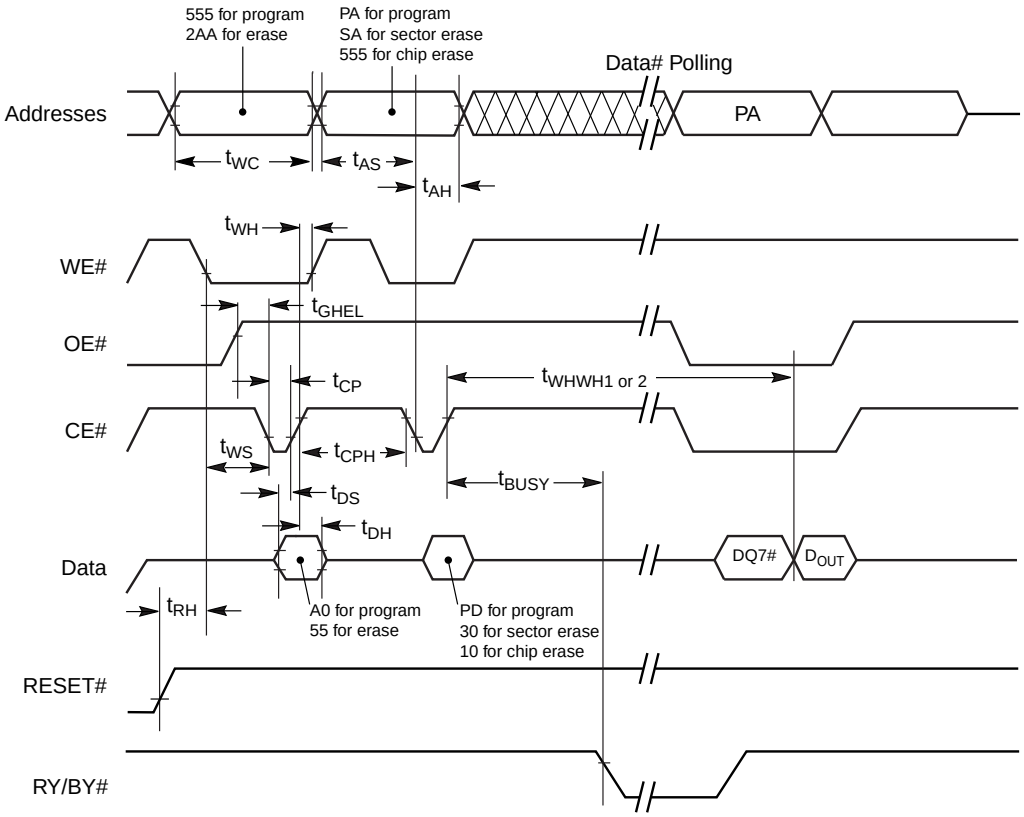


***Notes***

1. *PA = program address, PD = program data, DQ7# = complement of the data written to the device, $D_{OUT}$ = data written to the device.*
2. *Figure indicates the last two bus cycles of the command sequence.*
3. *Word mode address used as an example.*

# 18. Erase and Programming Performance

| Parameter | | Typ (Note 1) | Max (Note 2) | Unit | Comments |
|---|---|---|---|---|---|
| Sector Erase Time | | 0.5 | 10 | s | Excludes 00h programming prior to erasure (Note 4) |
| Chip Erase Time | | 10 | | s | |
| Byte Programming Time | | 6 | 150 | µs | Excludes system level overhead (Note 5) |
| Word Programming Time | | 6 | 150 | µs | |
| Chip Programming Time | Byte Mode | 6.3 | 80 | s | |
| | Word Mode | 3.2 | 60 | s | |

***Notes***

1. *Typical program and erase times assume the following conditions: 25°C, $V_{CC}$ = 3.0 V, 100,000 cycles, checkerboard data pattern.*
2. *Under worst case conditions of 90°C, $V_{CC}$ = 2.7 V, 1,000,000 cycles.*
3. *The typical chip programming time is considerably less than the maximum chip programming time listed, since most bytes program faster than the maximum program times listed.*
4. *In the pre-programming step of the Embedded Erase algorithm, all bytes are programmed to 00h before erasure.*
5. *System-level overhead is the time required to execute the two- or four-bus-cycle sequence for the program command. See Table 10.1 on page 32 for further information on command definitions.*
6. *The device has a minimum erase and program cycle endurance of 100,000 cycles per sector.*

# 19. TSOP and BGA Pin Capacitance

| Parameter Symbol | Parameter Description | Test Setup | Package | Typ | Max | Unit |
|---|---|---|---|---|---|---|
| $C_{IN}$ | Input Capacitance | $V_{IN}$ = 0 | TSOP | 4 | 6 | pF |
| | | | BGA | 4 | 6 | |
| $C_{OUT}$ | Output Capacitance | $V_{OUT}$ = 0 | TSOP | 4.5 | 5.5 | |
| | | | BGA | 4.5 | 5.5 | |
| $C_{IN2}$ | Control Pin Capacitance | $V_{IN}$ = 0 | TSOP | 5 | 6.5 | |
| | | | BGA | 5 | 6.5 | |
| $C_{IN3}$ | WP# Pin Capacitance | $V_{IN}$ = 0 | TSOP | 8.5 | 10 | |
| | | | BGA | 8.5 | 10 | |

***Notes***

1. *Sampled, not 100% tested.*
2. *Test conditions $T_A$ = 25°C, f = 1.0 MHz.*

# 20. Physical Dimensions

## 20.1 TS 048—48-Pin Standard TSOP

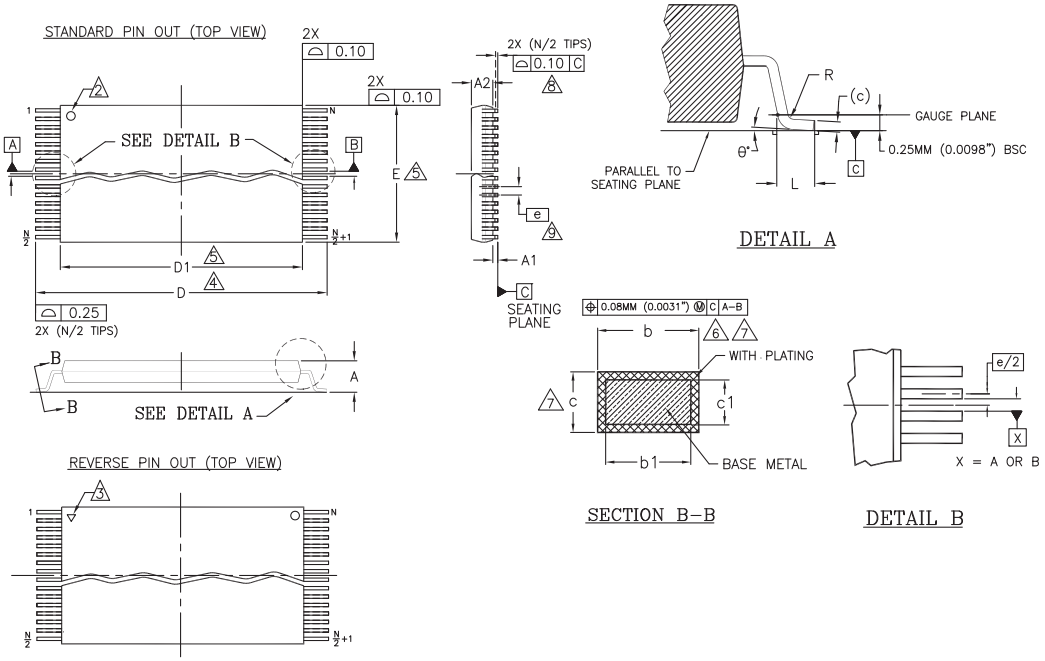


| PACKAGE | TS/TSR 48 | | |
|---|---|---|---|
| JEDEC | MO-142 (D) DD | | |
| SYMBOL | MIN | NOM | MAX |
| A | --- | --- | 1.20 |
| A1 | 0.05 | --- | 0.15 |
| A2 | 0.95 | 1.00 | 1.05 |
| b1 | 0.17 | 0.20 | 0.23 |
| b | 0.17 | 0.22 | 0.27 |
| c1 | 0.10 | --- | 0.16 |
| c | 0.10 | --- | 0.21 |
| D | 19.80 | 20.00 | 20.20 |
| D1 | 18.30 | 18.40 | 18.50 |
| E | 11.90 | 12.00 | 12.10 |
| e | 0.50 BASIC | | |
| L | 0.50 | 0.60 | 0.70 |
| Θ | 0° | --- | 8 |
| R | 0.08 | --- | 0.20 |
| N | 48 | | |

NOTES:

1. CONTROLLING DIMENSIONS ARE IN MILLIMETERS (mm). (DIMENSIONING AND TOLERANCING CONFORM TO ANSI Y14.5M-1982)
2. PIN 1 IDENTIFIER FOR STANDARD PIN OUT (DIE UP).
3. PIN 1 IDENTIFIER FOR REVERSE PIN OUT (DIE DOWN): INK OR LASER MARK.
4. TO BE DETERMINED AT THE SEATING PLANE -C-. THE SEATING PLANE IS DEFINED AS THE PLANE OF CONTACT THAT IS MADE WHEN THE PACKAGE LEADS ARE ALLOWED TO REST FREELY ON A FLAT HORIZONTAL SURFACE.
5. DIMENSIONS D1 AND E DO NOT INCLUDE MOLD PROTRUSION. ALLOWABLE MOLD PROTUSION IS 0.15mm (.0059") PER SIDE.
6. DIMENSION b DOES NOT INCLUDE DAMBAR PROTUSION. ALLOWABLE DAMBAR PROTUSION SHALL BE 0.08mm (0.0031") TOTAL IN EXCESS OF b DIMENSION AT MAX. MATERIAL CONDITION. MINIMUM SPACE BETWEEN PROTRUSION AND AN ADJACENT LEAD TO BE 0.07mm (0.0028").
7. THESE DIMENSIONS APPLY TO THE FLAT SECTION OF THE LEAD BETWEEN 0.10mm (.0039") AND 0.25mm (0.0098") FROM THE LEAD TIP.
8. LEAD COPLANARITY SHALL BE WITHIN 0.10mm (0.004") AS MEASURED FROM THE SEATING PLANE.
9. DIMENSION "e" IS MEASURED AT THE CENTERLINE OF THE LEADS.

3664 \ f16-038.10 \ 11.6.7

***Note***
*For reference only. BSC is an ANSI standard for Basic Space Centering.*

## 20.2 VBK048—48-Ball Fine-Pitch Ball Grid Array (BGA) 8.15 mm x 6.15 mm

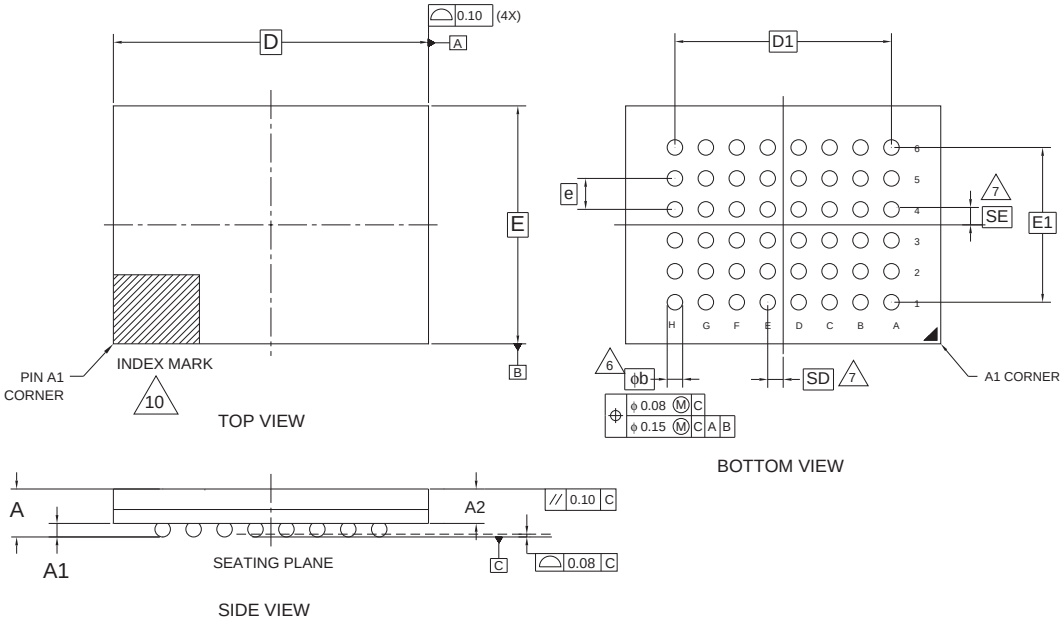


| PACKAGE | VBK 048 | | | |
|---|---|---|---|---|
| JEDEC | N/A | | | |
| | 8.15 mm x 6.15 mm NOM PACKAGE | | | |
| SYMBOL | MIN | NOM | MAX | NOTE |
| A | --- | --- | 1.00 | OVERALL THICKNESS |
| A1 | 0.18 | --- | --- | BALL HEIGHT |
| A2 | 0.62 | --- | 0.76 | BODY THICKNESS |
| D | 8.15 BSC. | | | BODY SIZE |
| E | 6.15 BSC. | | | BODY SIZE |
| D1 | 5.60 BSC. | | | BALL FOOTPRINT |
| E1 | 4.00 BSC. | | | BALL FOOTPRINT |
| MD | 8 | | | ROW MATRIX SIZE D DIRECTION |
| ME | 6 | | | ROW MATRIX SIZE E DIRECTION |
| N | 48 | | | TOTAL BALL COUNT |
| ϕb | 0.35 | --- | 0.43 | BALL DIAMETER |
| e | 0.80 BSC. | | | BALL PITCH |
| SD / SE | 0.40 BSC. | | | SOLDER BALL PLACEMENT |
| | --- | | | DEPOPULATED SOLDER BALLS |

NOTES:

1. DIMENSIONING AND TOLERANCING PER ASME Y14.5M-1994.
2. ALL DIMENSIONS ARE IN MILLIMETERS.
3. BALL POSITION DESIGNATION PER JESD 95-1, SPP-010 (EXCEPT AS NOTED).
4. e REPRESENTS THE SOLDER BALL GRID PITCH.
5. SYMBOL "MD" IS THE BALL ROW MATRIX SIZE IN THE "D" DIRECTION.

   SYMBOL "ME" IS THE BALL COLUMN MATRIX SIZE IN THE "E" DIRECTION.

   N IS THE TOTAL NUMBER OF SOLDER BALLS.

6. DIMENSION "b" IS MEASURED AT THE MAXIMUM BALL DIAMETER IN A PLANE PARALLEL TO DATUM C.
7. SD AND SE ARE MEASURED WITH RESPECT TO DATUMS A AND B AND DEFINE THE POSITION OF THE CENTER SOLDER BALL IN THE OUTER ROW.

   WHEN THERE IS AN ODD NUMBER OF SOLDER BALLS IN THE OUTER ROW PARALLEL TO THE D OR E DIMENSION, RESPECTIVELY, SD OR SE = 0.000.

   WHEN THERE IS AN EVEN NUMBER OF SOLDER BALLS IN THE OUTER ROW, SD OR SE = e/2

8. NOT USED.
9. "+" INDICATES THE THEORETICAL CENTER OF DEPOPULATED BALLS.
10. A1 CORNER TO BE IDENTIFIED BY CHAMFER, LASER OR INK MARK, METALLIZED MARK INDENTATION OR OTHER MEANS.

3338 \ 16-038.25b

# 21. Revision History

| Section | Description |
|---|---|
| **Revision 01 (July 26, 2007)** | |
| | Initial release. |
| **Revision 02 (October 29, 2007)** | |
| Distinctive Characteristics | Corrected number of 64 Kbyte / 32 Kword sectors |
| Global | Removed 44-pin SOP package |
| Ordering Information | Removed all leaded package offerings |
| S29AL008J Device Bus Operations Table | Under Note 3: Removed the line “If WP# = $V_{HH}$, all sectors will be unprotected.” |
| CFI Query Identification String Table | Updated the data for CFI addresses 2C hex & 39 hex |
| S29AL008J Command Definitions Table | The 2nd cycle data for the “Unlock Bypass Reset” command was updated from 'F0' to '00'. |
| Absolute Maximum Ratings | Updated $V_{CC}$ Absolute Maximum Rating |
| CMOS Compatible Table | Updated $I_{CC3}$ Standby current test condition<br>Updated maximum value of $V_{OL}$<br>Updated minimum value of $V_{LKO}$ |
| Figure *Back to Back Read/Write Cycle Timing* | Corrected the $t_{SR/W}$ duration |
| **Revision 03 (March 27, 2008)** | |
| Reset #: Hardware Reset Pin | Updated current consumption during RESET# pulse |
| CMOS Compatible Table | Updated maximum value of $I_{LI}$<br>Updated test condition, typical and maximum value of Icc3<br>Updated test condition, typical and maximum value of Icc4<br>Updated test condition, typical and maximum value of Icc5<br>Updated minimum value of $V_{IL}$<br>Added Note 5 |
| Ordering Information | Updated valid combination<br>• Removed 45 ns, added 70 ns |
| **Revision 04 (May 23, 2008)** | |
| Global | Removed fortified BGA package option |
| Ordering Information | Added the Regulated Voltage option<br>Added the Extended Temperature Range<br>Updated the Valid Combination table |
| Pin Configuration | Updated Pin Configuration table |
| Device Bus Operation | Updated the S29AL008J Device Bus Operation table and modified Note 3 |
| Operating Ranges | Added Extended Temperature Range information<br>Added Regulated Voltage |
| **Revision 05 (August 12, 2008)** | |
| Sector Protection/Unprotection | Title changed to Sector Group Protection and Unprotection<br>Section amended and restated to Sector Group Protection and Unprotection |
| Temporary Sector Unprotect | Title changed to Temporary Sector Group Unprotect<br>Figure 7.1; Title changed to Temporary Sector Group Unprotect Operation<br>Figure 7.2; Title changed to In-System Sector Protect/Unprotect Algorithms |
| Temporary Sector Unprotect | Title changed to Temporary Sector Group Unprotect<br>Figure 17.11; Title changed to Temporary Sector Group Unprotect/Timing Diagram<br>Figure 17.12; Sector Group Protect/Unprotect Timing Diagram |
| Reading Toggle Bits DQ6/DQ2 | Updated Figure 11.2 |
| Ordering Information | Added SSOP56 package option<br>Updated the Valid Combination table |
| Connection Diagrams | Added 56-pin Shrink Small Outline Package (SSOP56) |

| Section | Description |
|---|---|
| Physical Dimensions | Added 56-pin Shrink Small Outline Package (SSOP56) |
| Alternate CE# Controlled Erase/Program Operations | TDS value changed from 45 ns to 35 ns |
| Erase/Program Operation | Added figure Toggle Bit Timing (During Embedded Algorithm) |
| Product Selector Guide | Updated Table |
| **Revision 06 (October 29, 2008)** | |
| Customer Lockable: Secured Silicon Sector Programmed and Protected at the Factory | Modified first bullet<br>Updated figure Secured Silicon Sector Protect Verify |
| TSOP and Pin Capacitance | Updated Table |
| **Revision 07 (February 3, 2009)** | |
| Ordering Information | Updated the Valid Combination table |
| Erase/Program Operation | Updated Table<br>Removed Figure *Toggle Bit Timing (During Embedded Algorithm*) |
| Erase and Programming Performance | Updated Table |
| **Revision 08 (July 9, 2009)** | |
| General | Corrected minor typos |
| Physical Dimensions | Updated TS048 |
| Customer Lockable: Secured Silicon Sector NOT Programmed and Protected at the Factory | Modified first bullet |
| Erase and Programming Performance | Updated Table |
| **Revision 09 (February 23, 2010)** | |
| Sector Erase Command Sequence | Added clarification regarding additional sector erase commads during time-out period |
| Command Definitions Table | Added Note 15 to clarify additional sector erase commands during time-out period |
| **Revision 10 (December 9, 2011)** | |
| Ordering Information | Added Low-Halogen 48-ball BGA ordering option |
| RESET#: Hardware Reset Pin | Added sentence regarding use of CE# with RESET# |
| RESET# Timings Figure | Added note |
| **Revision 11 (April 12, 2012)** | |
| Global | Removed SSOP-56 |

***Colophon***

The products described in this document are designed, developed and manufactured as contemplated for general use, including without limitation, ordinary industrial use, general office use, personal use, and household use, but are not designed, developed and manufactured as contemplated (1) for any use that includes fatal risks or dangers that, unless extremely high safety is secured, could have a serious effect to the public, and could lead directly to death, personal injury, severe physical damage or other loss (i.e., nuclear reaction control in nuclear facility, aircraft flight control, air traffic control, mass transport control, medical life support system, missile launch control in weapon system), or (2) for any use where chance of failure is intolerable (i.e., submersible repeater and artificial satellite). Please note that Spansion will not be liable to you and/or any third party for any claims or damages arising in connection with above-mentioned uses of the products. Any semiconductor devices have an inherent chance of failure. You must protect against injury, damage or loss from such failures by incorporating safety design measures into your facility and equipment such as redundancy, fire protection, and prevention of over-current levels and other abnormal operating conditions. If any products described in this document represent goods or technologies subject to certain restrictions on export under the Foreign Exchange and Foreign Trade Law of Japan, the US Export Administration Regulations or the applicable laws of any other country, the prior authorization by the respective government entity will be required for export of those products.

***Trademarks and Notice***

The contents of this document are subject to change without notice. This document may contain information on a Spansion product under development by Spansion. Spansion reserves the right to change or discontinue work on any product without notice. The information in this document is provided as is without warranty or guarantee of any kind as to its accuracy, completeness, operability, fitness for particular purpose, merchantability, non-infringement of third-party rights, or any other warranty, express, implied, or statutory. Spansion assumes no liability for any damages of any kind arising out of the use of the information in this document.

Copyright © 2007-2012 Spansion Inc. All rights reserved. Spansion®, the Spansion logo, MirrorBit®, MirrorBit® Eclipse™, ORNAND™ and combinations thereof, are trademarks and registered trademarks of Spansion LLC in the United States and other countries. Other names used are for informational purposes only and may be trademarks of their respective owners.