THIS COPY IS PROVIDED ON A RESTRICTED BASIS AND IS NOT TO BE USED IN ANY WAY DETRIMENTAL TO THE INTERESTS OF PANDUIT CORP.

A

E

PANDUIT PART NUMBER	WEIGHT
FR6TRBN12 FR6TRBN12M	1.11 LB/EACH (504g/EACH)

F

D NOTES:

1. SEE CURRENT CATALOG FOR ADDITIONAL PART SUFFIXES TO INDICATE PACKAGE QUANTITY.
2. THE FIBERRUNNER 4x4 AND 6x4 QUIKLOCK NEW THREADED ROD BRACKET IS USED TO SUPPORT THE FIBERRUNNER 4x4 AND/OR 6x4 CABLE ROUTING SYSTEMS FROM A SECTION OF NEW 1/2" (M12) THREADED ROD (NOT INCLUDED).
3. THE FIBERRUNNER 4x4 AND 6x4 QUIKLOCK NEW THREADED ROD BRACKET INCLUDES:
   ONE (1) BRACKET ASSEMBLY,
   TWO (2) 1/2 HELICAL SPRING LOCKWASHERS,
   TWO (2) 1/2-13 HEAVY HEX NUTS (FR6TRBN12 ONLY),
   TWO (2) M12x1.75 HEX NUTS (FR6TRBN12M ONLY)
4. FINISH COLOR: BLACK (EXCEPT HARDWARE)
5. DIMENSIONS IN PARENTHESES ARE IN METRIC.

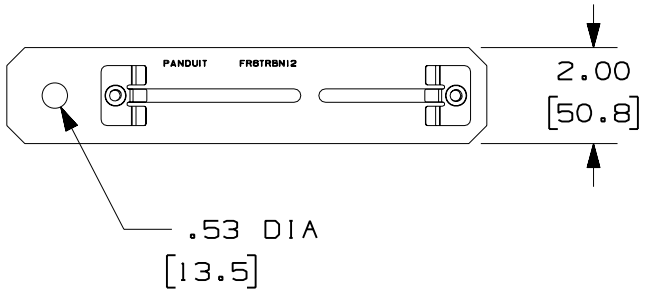

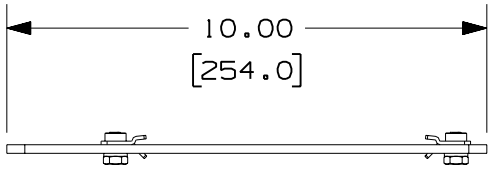

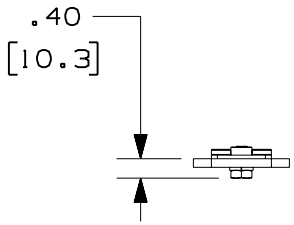

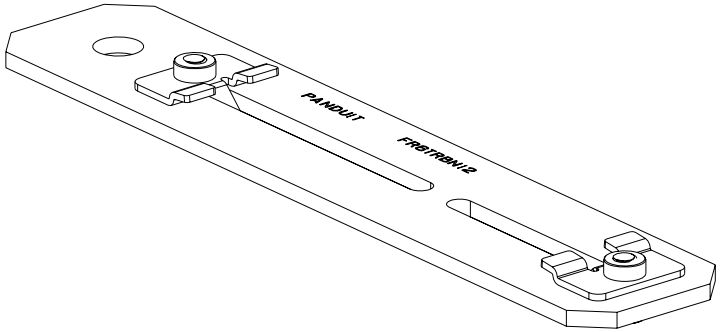

ENG. REF.: D37585BC_DC_FR6TRBN12_01.prt

CAD FILENAME/LAYERS C FR6TRBN12.pdf

PANDUIT CORP TINLEY PARK, ILLINOIS

B FIBERRUNNER 4x4 AND 6x4 QUIKLOCK NEW THREADED ROD BRACKET - 1/2" (M12) THREADED ROD (FR6TRBN12, FR6TRBN12M) G H

CUSTOMER DRAWING

UNLESS OTHERWISE SPECIFIED, DIMENSIONAL TOLERANCES ARE:
(.X) ± (.XXX) ±
(.XX) ±.03 (.8) ANGLES ±

UNLESS OTHERWISE SPECIFIED, ALL DIMENSIONS ARE GIVEN IN INCHES, THIRD ANGLE PROJECTION.

DRAWN BY MSO
MAT'L: STEEL
SCALE NONE
DATE 5-11-00
CHK'D CVV
DRAWING NO. 37585-25
DWG A
SIZE

REV	DATE	BY	CHK	DESCRIPTION	ECN	-	R	CUST	SUP	GMBH
-	--------	---	--	H. REMOVED ALL REFERENCE TO FR6TRBN58	--------		--	--		
-	--------	---	--	G. REVISED TO INCLUDE FR6TRBN12M	--------		--	--		
-	--------	---	--	F. REVISED PART WEIGHT E. REVISED CHART	--------		--	--		
-	--------	---	--	D. REVISED GENERAL NOTES C. REVISED CAD FILENAME	--------		--	--		
1	8-1-06	DTP	RN	B. REVISED DRAWING TITLE A. REVISED AND REDRAWN	37585-25		RN	RN		