THIS DRAWING IS UNPUBLISHED. RELEASED FOR PUBLICATION OCT ,2001.
© COPYRIGHT 2001 By – ALL RIGHTS RESERVED.

LOC	DIST
ES	–

REVISIONS

P	LTR	DESCRIPTION	DATE	DWN	APVD
	M2	REVISED PER ECO-11-005033	25MAR11	RK	HMR

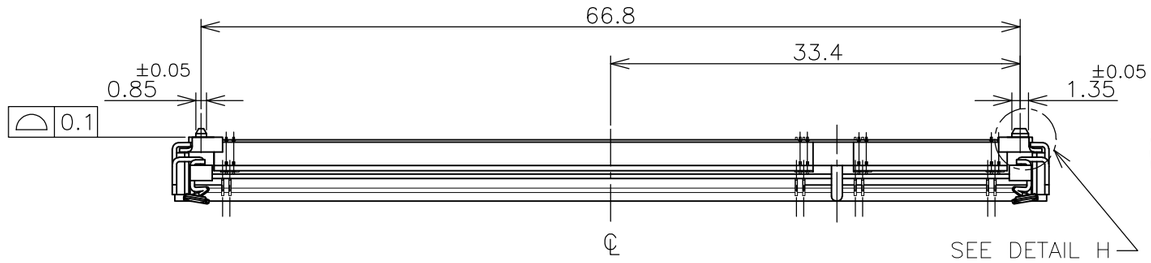

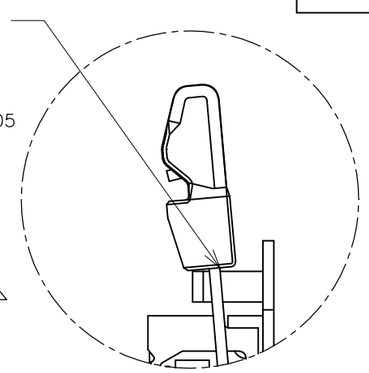

DETAIL A
(SCALE 5:1)

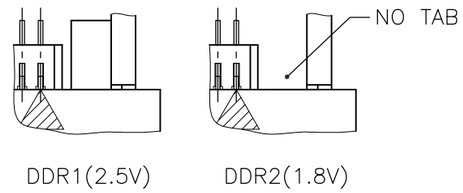

DETAIL L
(SCALE 5:1)

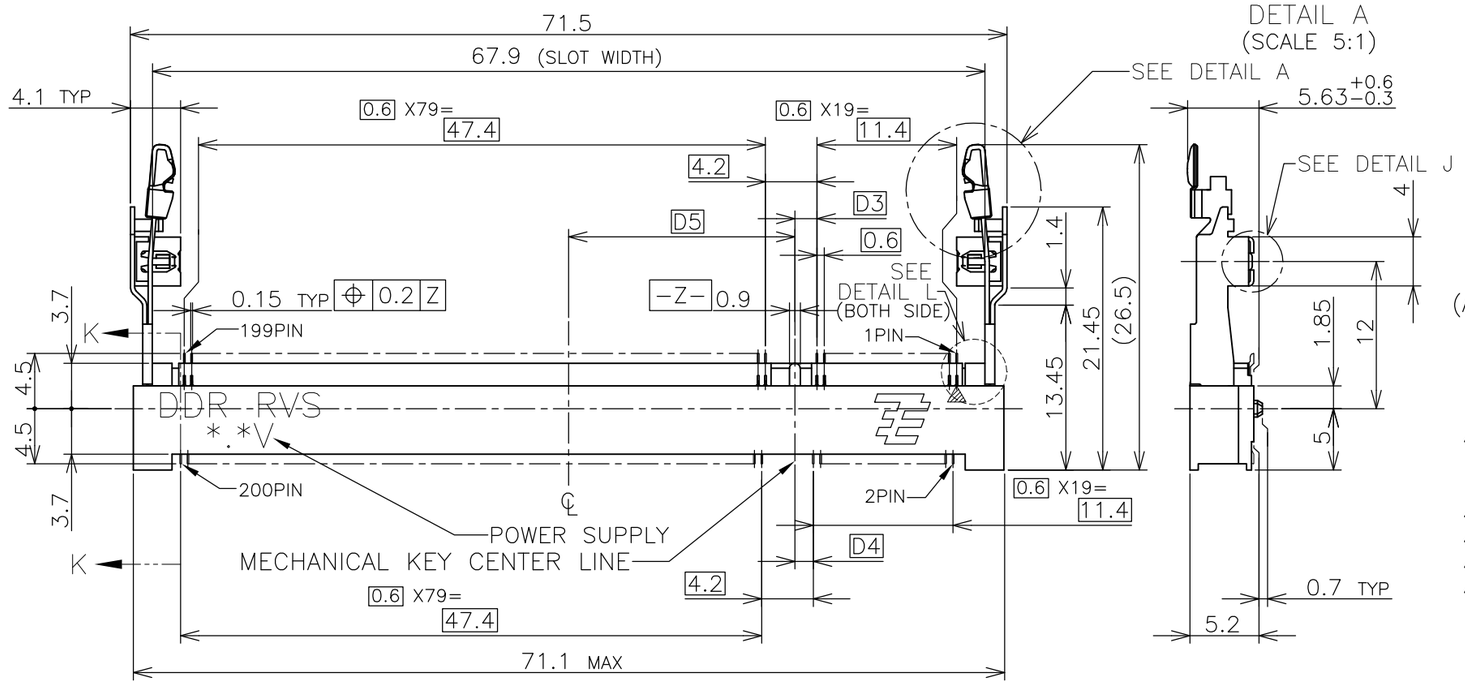

HOW TO MATE AND UNMATE

MATE: (1) → (4)
UNMATE: (5) → (7)

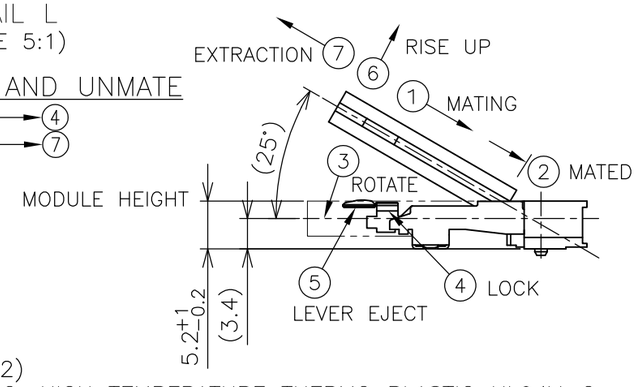

(APPLIED TO SHEET 1–2)

1. MATERIAL ; HOUSING: HIGH TEMPERATURE THERMO PLASTIC UL94V-0
   CONTACT: COPPER ARROY
   LOCK LEVER STAINLESS STEEL
   SOLDER PEG: COPPER ARROY
2. FINISH ; CONTACT AREA: GOLD FLASH ON 0.0013MIN ALL OVER NICKEL.
   SOLDERING AREA: GOLD FLASH PLT.
   SOLDER PEG: TIN PLATING.
3. MECHANICAL KEY POSITION OF CONNECTOR SEE TABLE.
4. TOLERANCES NON-CUMULATIVE.
5. NOT TO SCALE.
6. ⬚ INSIDE MUST BE RESIST COAT EXCEPT SOLDER PATTERN.
7. IF THE MODULE DOESN'T INSERT AND LOCK IN THE LATCH SMOOTHLY, OPEN WIDE BOTH LATCHES BY MANUAL. AND THE MODULE MUST BE INSERTED AND LOCKED IN THE LATCH.
8. FINISH ; CONTACT AREA: 0.00076 GOLD ON 0.0013MIN ALL OVER NICKEL.
   SOLDERING AREA: GOLD FLASH PLT.
   SOLDER PEG: TIN PLATING.

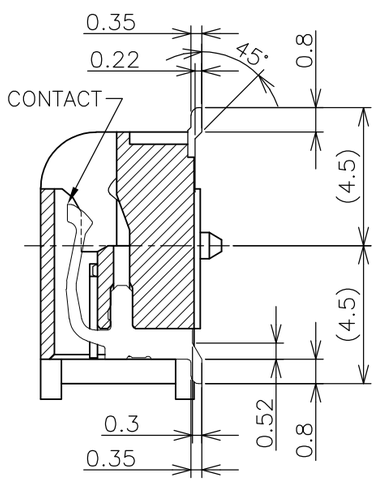

K-K
(SCALE 5:1)

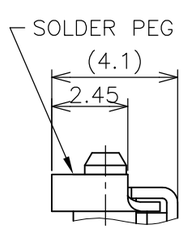

DETAIL H
(SCALE 5:1)

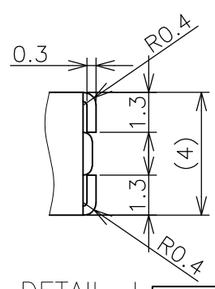

DETAIL J
(SCALE 5:1)

FINISH	TOOLING STATUS	POWER SUPPLY	D5	D4	D3	POS	PART NO.
8	AVAILABLE	1.8V (DDR2)	17.55	2.4	2.7	200	1473150-6
7	AVAILABLE	1.8V (DDR2)	17.55	2.4	2.7	200	1-1473150-4
6	AVAILABLE	1.8V (DDR2)	17.55	2.4	2.7	200	1473150-4
5	AVAILABLE	2.5V (DDR1)	18.45	1.5	1.8	200	1473150-1

GENERAL TOLERANCE
10≥:±0.2
30≥ >10:±0.25
100≥ >30:±0.3
ANGLES:±3°

THIS DRAWING IS A CONTROLLED DOCUMENT.

DIMENSIONS: MM

TOLERANCES UNLESS OTHERWISE SPECIFIED:
0 PLC ±–
1 PLC ±–
2 PLC ±–
3 PLC ±–
4 PLC ±–
ANGLES ±–

MATERIAL –
FINISH –

DWN	B.WONG	20JUL10
CHK	C.WANG	20JUL10
APVD	S.YAO	20JUL10
PRODUCT SPEC	108-5701	
APPLICATION SPEC	–	
WEIGHT	4.7g	

TE Connectivity

NAME
DDR1 & DDR2 SODIMM SOCKET
0.6mm PITCH 200POS
STANDARD PROFILE REVERSE TYPE (NEW LATCH TYPE)

SIZE	CAGE CODE	DRAWING NO	RESTRICTED TO
A3	00779	C-1473150	–

CUSTOMER DRAWING | SCALE 2:1 | SHEET 1 OF 4 | REV M2

THIS DRAWING IS UNPUBLISHED. RELEASED FOR PUBLICATION OCT ,2001.
© COPYRIGHT 2001 By – ALL RIGHTS RESERVED.

LOC	DIST
ES	–

REVISIONS

P	LTR	DESCRIPTION	DATE	DWN	APVD
	–	SEE SHEET 1	–	–	–

REFERENCE P.C.BOARD PATTERN LAYOUT (CONNECTOR MOUNTING SIDE)

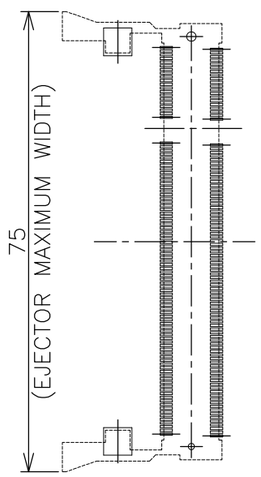

REAL SIZE (SCALE 1:1)

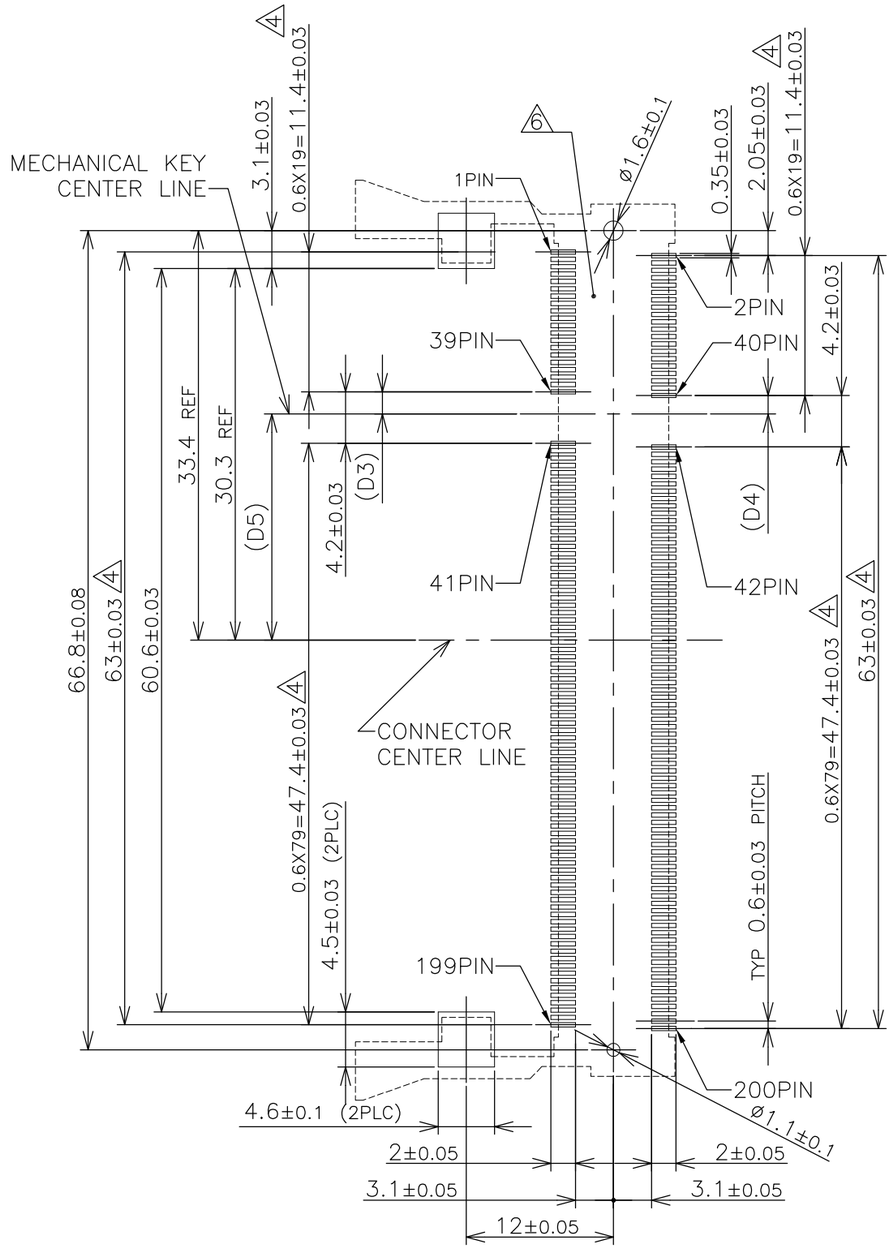

1.8V	17.55	2.4	2.7
2.5V	18.45	1.5	1.8
POWER SUPPLY	D5	D4	D3

THIS DRAWING IS A CONTROLLED DOCUMENT.

DIMENSIONS: MM

TOLERANCES UNLESS OTHERWISE SPECIFIED:
0 PLC ±
1 PLC ±
2 PLC ±
3 PLC ±
4 PLC ±
ANGLES ±

MATERIAL

FINISH

DWN
CHK
APVD
PRODUCT SPEC
APPLICATION SPEC
WEIGHT

CUSTOMER DRAWING

TE Connectivity

NAME
DDR1 & DDR2 SODIMM SOCKET
0.6mm PITCH 200POS
STANDARD PROFILE REVERSE TYPE (NEW LATCH TYPE)

SIZE	CAGE CODE	DRAWING NO	RESTRICTED TO
A3	00779	C-1473150	–

SCALE	SHEET	REV
2:1	2 OF 4	M2

THIS DRAWING IS UNPUBLISHED. RELEASED FOR PUBLICATION OCT ,2001.
© COPYRIGHT 2001 By – ALL RIGHTS RESERVED.

LOC	DIST
ES	

REVISIONS

P	LTR	DESCRIPTION	DATE	DWN	APVD
	–	SEE SHEET 1	–	–	–

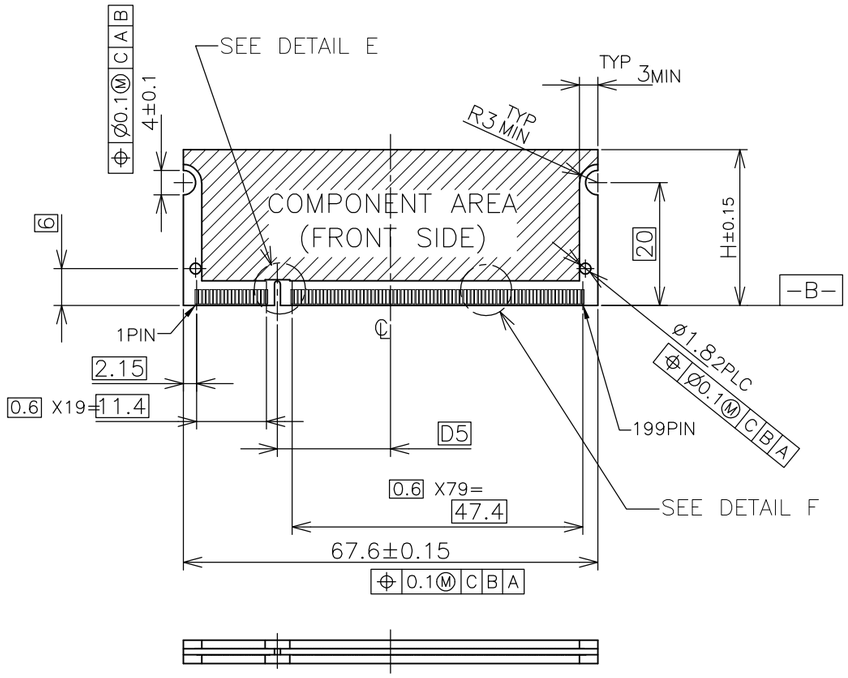

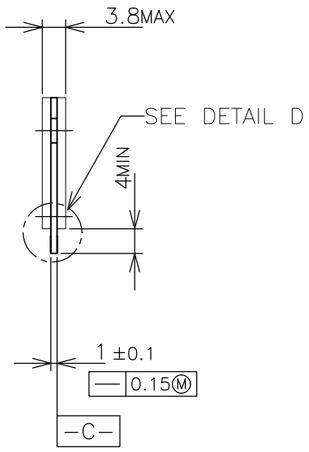

DETAIL F
SCALE 8:1

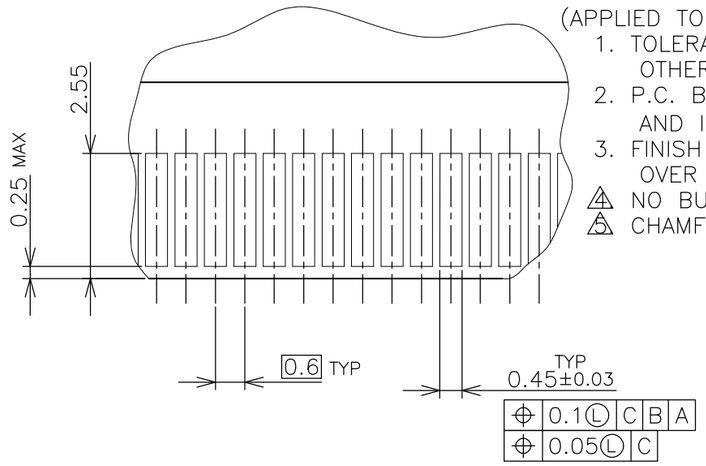

(APPLIED TO SHEET 3)
1. TOLERANCES ON ALL DIMENSIONS ±0.15 UNLESS OTHERWISE SPECIFIED.
2. P.C. BOARD THICKNESS APPLIES ACROSS TABS AND INCLUDES PLATING AND/OR METALIZATION.
3. FINISH OF PAD : GOLD PLATING 0.00076 MIN. OVER Ni PLATING 0.002MIN.

4 NO BURR
5 CHAMFER 0.25 MAX x 45° IF EXIST.

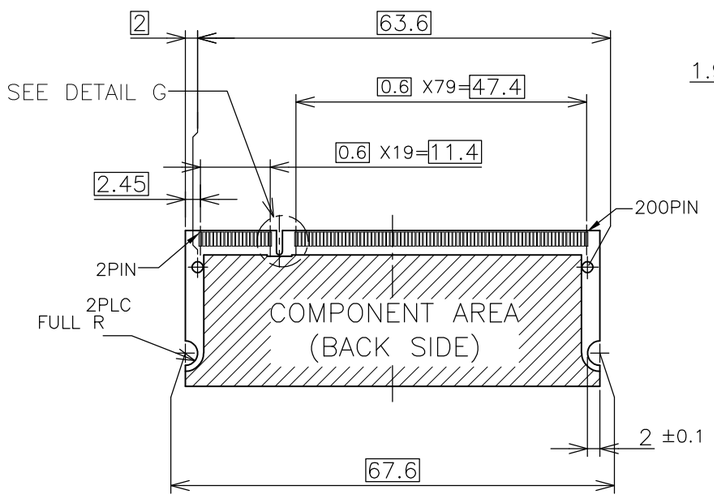

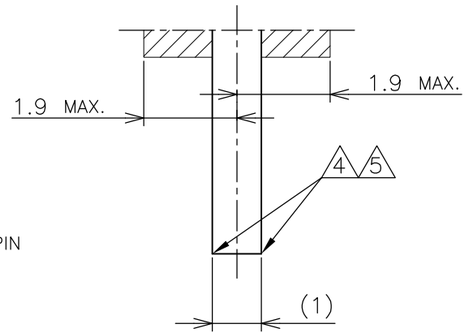

DETAIL D
SCALE 8:1

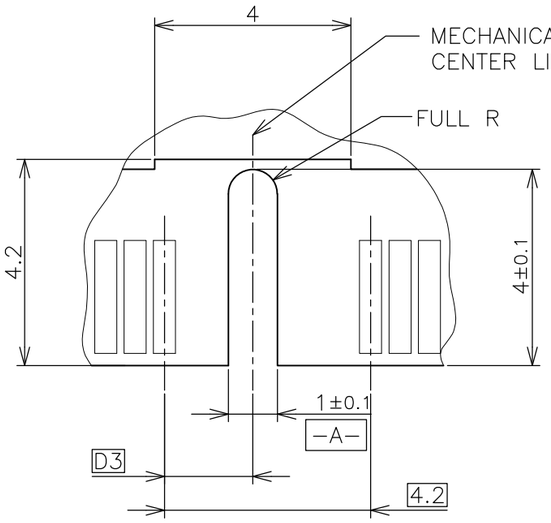

DETAIL E
SCALE 8:1 (FRONT SIDE)

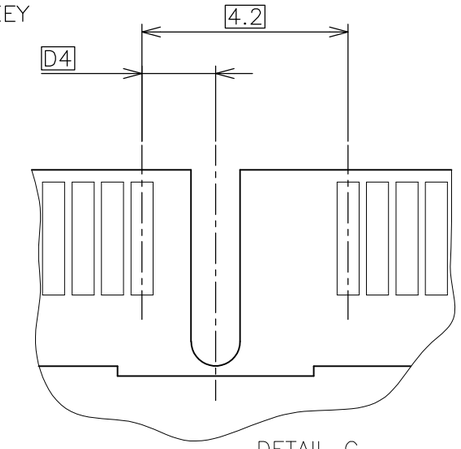

DETAIL G
SCALE 8:1 (BACK SIDE)

31.75	1.8V	17.55	2.4	2.7
25.4	2.5V	18.45	1.5	1.8
H	POWER SUPPLY	D5	D4	D3

RECOMMENDED MATING P.C.B CONFIGRATION

THIS DRAWING IS A CONTROLLED DOCUMENT.

DIMENSIONS: MM

TOLERANCES UNLESS OTHERWISE SPECIFIED:
0 PLC ±
1 PLC ±
2 PLC ±
3 PLC ±
4 PLC ±
ANGLES ±

MATERIAL
FINISH

DWN
CHK
APVD
PRODUCT SPEC
APPLICATION SPEC
WEIGHT

TE Connectivity

NAME
DDR1 & DDR2 SODIMM SOCKET
0.6mm PITCH 200POS
STANDARD PROFILE REVERSE TYPE (NEW LATCH TYPE)

SIZE	CAGE CODE	DRAWING NO	RESTRICTED TO
A3	00779	C-1473150	–

CUSTOMER DRAWING | SCALE 2:1 | SHEET 3 OF 4 | REV M2

THIS DRAWING IS UNPUBLISHED. RELEASED FOR PUBLICATION OCT ,2001.
© COPYRIGHT 2001 By – ALL RIGHTS RESERVED.

LOC	DIST
ES	

REVISIONS

P	LTR	DESCRIPTION	DATE	DWN	APVD
	–	SEE SHEET 1	–	–	–

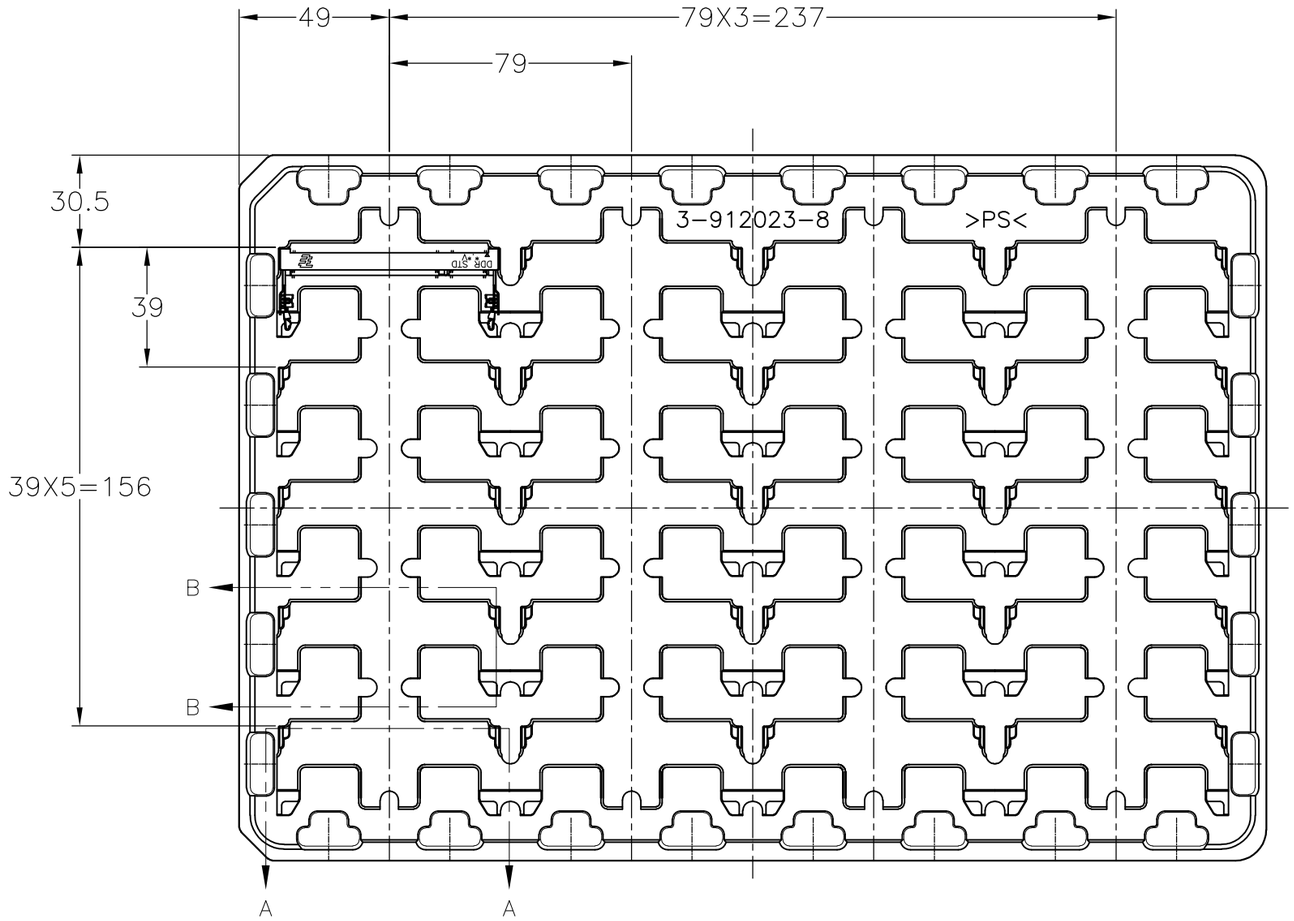

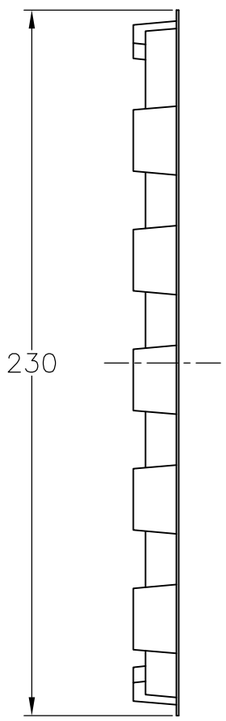

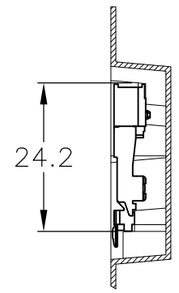

B–B
SCALE 2:1

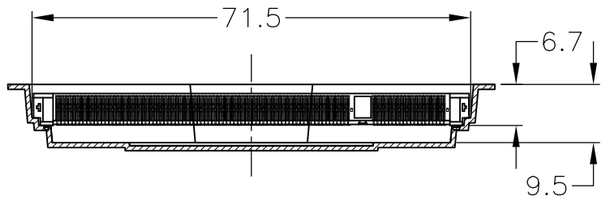

A–A
SCALE 2:1
(180DEG. ROTATE)

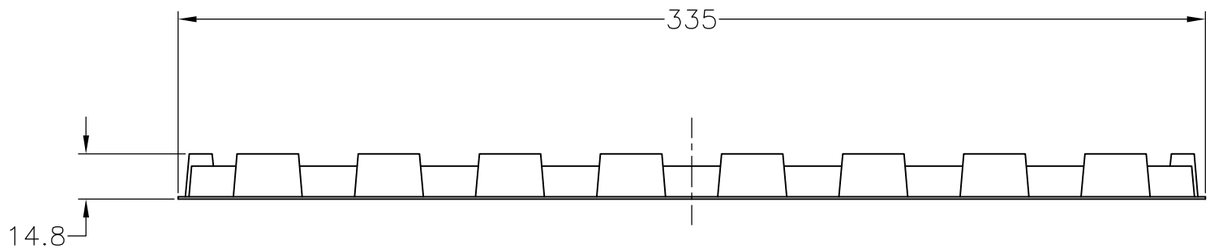

REMARK	QTY	P/N
DDR2	20EA/TRAY	1473150–6
DDR2	20EA/TRAY	1–1473150–4
DDR2	20EA/TRAY	1473150–4
DDR1	20EA/TRAY	1473150–1

(APPLIED TO SHEET 4)

1. THE DIRECTION OF EACH CONNECTOR ON A TRAY IS REFERRED TO THIS DRAWING.
2. GENERAL TOLERANCE: ±0.5

THIS DRAWING IS A CONTROLLED DOCUMENT.

DIMENSIONS: MM

TOLERANCES UNLESS OTHERWISE SPECIFIED:
0 PLC ±
1 PLC ±
2 PLC ±
3 PLC ±
4 PLC ±
ANGLES ±

MATERIAL

FINISH

DWN
CHK
APVD
PRODUCT SPEC
APPLICATION SPEC
WEIGHT

TE Connectivity

NAME
DDR1 & DDR2 SODIMM SOCKET
0.6mm PITCH 200POS
STANDARD PROFILE REVERSE TYPE (NEW LATCH TYPE)

SIZE	CAGE CODE	DRAWING NO	RESTRICTED TO
A3	00779	C-1473150	–

CUSTOMER DRAWING

SCALE	SHEET	REV
1:2	4 OF 4	M2