THIS DRAWING IS UNPUBLISHED. RELEASED FOR PUBLICATION -,- .
© COPYRIGHT - By - ALL RIGHTS RESERVED.

LOC	DIST
AF	50

REVISIONS

P	LTR	DESCRIPTION	DATE	DWN	APVD
	M	REVISED PER ECR-13-004343	30JUL13	KH	KR

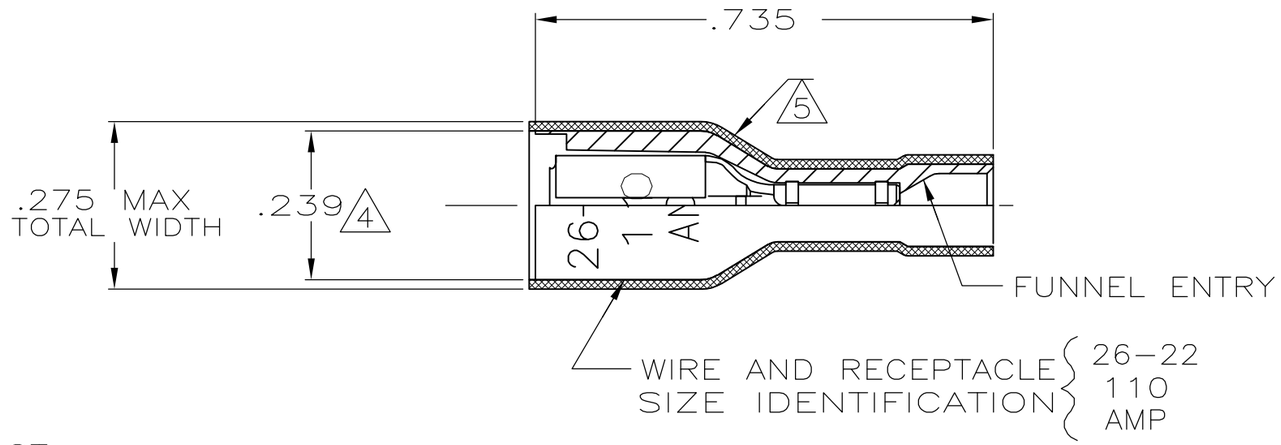

1 MATES WITH .020±.001x.110 OR .125 TABS.

2 WIRE STRIP LENGTH .281

3 INSULATION SIZE .100 MAX DIA

4 DIMENSION DOES NOT INCLUDE TRIM BURR

5 .015 MAX CARRIER TRIM BURR PER SIDE IS ALLOWABLE IN THE SHADED AREA

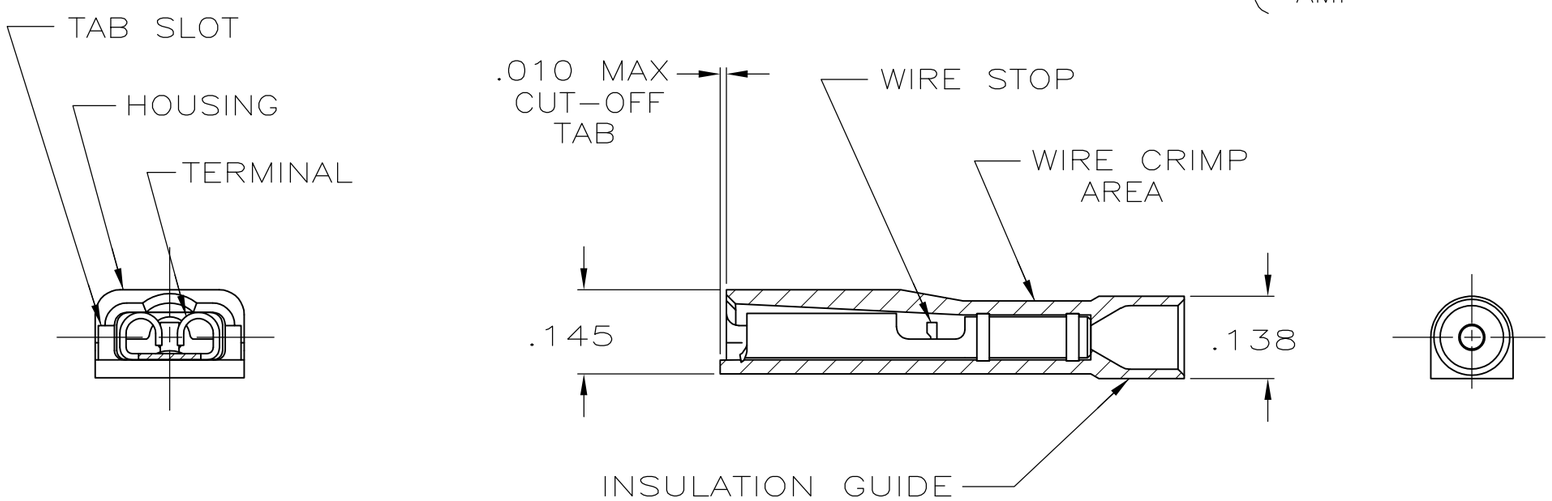

HOUSING:NYLON,COLOR-VIOLET TINT RECEPTACLE: BRASS,TIN	7-520366-2
MATERIAL & FINISH	PART NO

THIS DRAWING IS A CONTROLLED DOCUMENT.

DIMENSIONS: INCHES

TOLERANCES UNLESS OTHERWISE SPECIFIED:

0 PLC	± -
1 PLC	± -
2 PLC	± -
3 PLC	± .015
4 PLC	± -
ANGLES	± -

MATERIAL: SEE TABLE

FINISH: SEE TABLE

DWN	P FORTNEY	11/14/88
CHK	MS FEHER	11/15/88
APVD	K RANDOLPH	11/15/88
PRODUCT SPEC	108-2043	
APPLICATION SPEC	114-2123	
WEIGHT	-	

TE Connectivity

NAME: RECEPTACLE ASSY,ULTRA-FAST, LOOSE PIECE, .110/.125 SERIES,26-22 AWG

SIZE	CAGE CODE	DRAWING NO	RESTRICTED TO
A3	00779	C-520366	-

CUSTOMER DRAWING

SCALE	SHEET	REV
4:1	1 OF 1	M