Feb.1.2018 Copyright 2018 HIROSE ELECTRIC CO., LTD. All Rights Reserved.

	COUNT	DESCRIPTION OF REVISIONS	BY	CHKD	DATE		COUNT	DESCRIPTION OF REVISIONS	BY	CHKD	DATE
△						△					
△						△					
△						△					

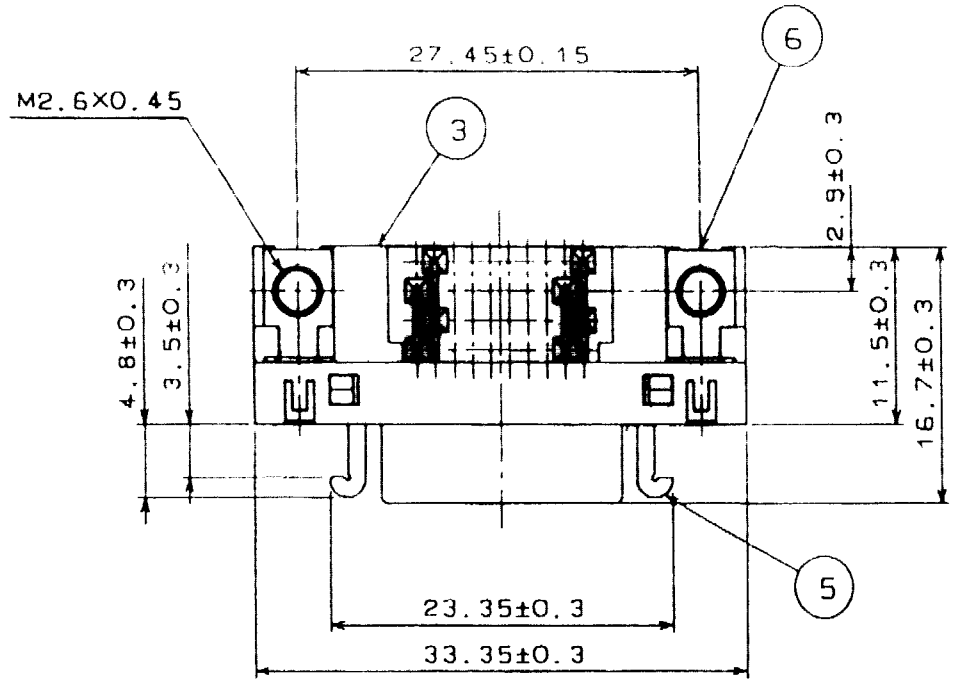

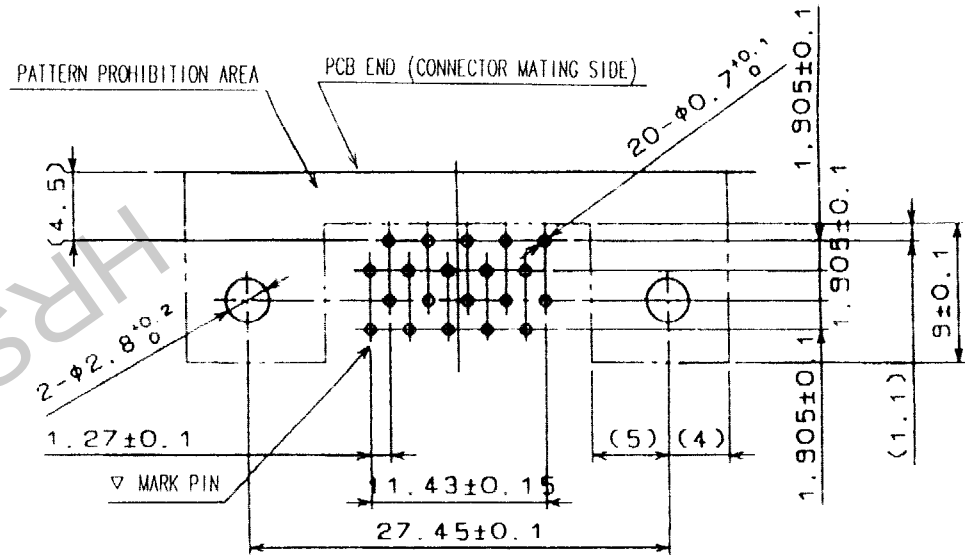

RECOMMENDED PC BOARD PATTERN

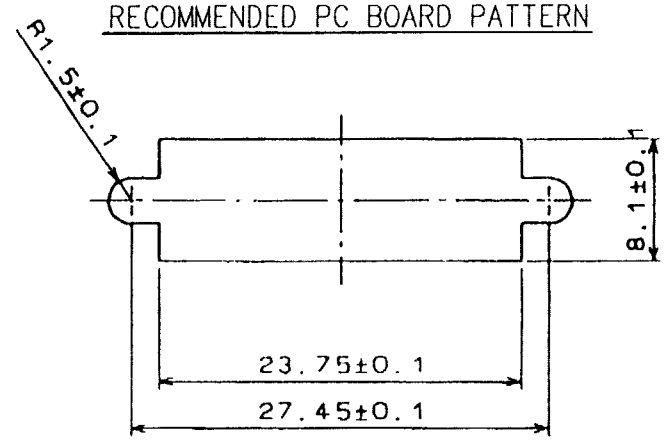

PANEL CUTOUT
(PANEL THICKNESS TO BE 1.6 mm MAX)

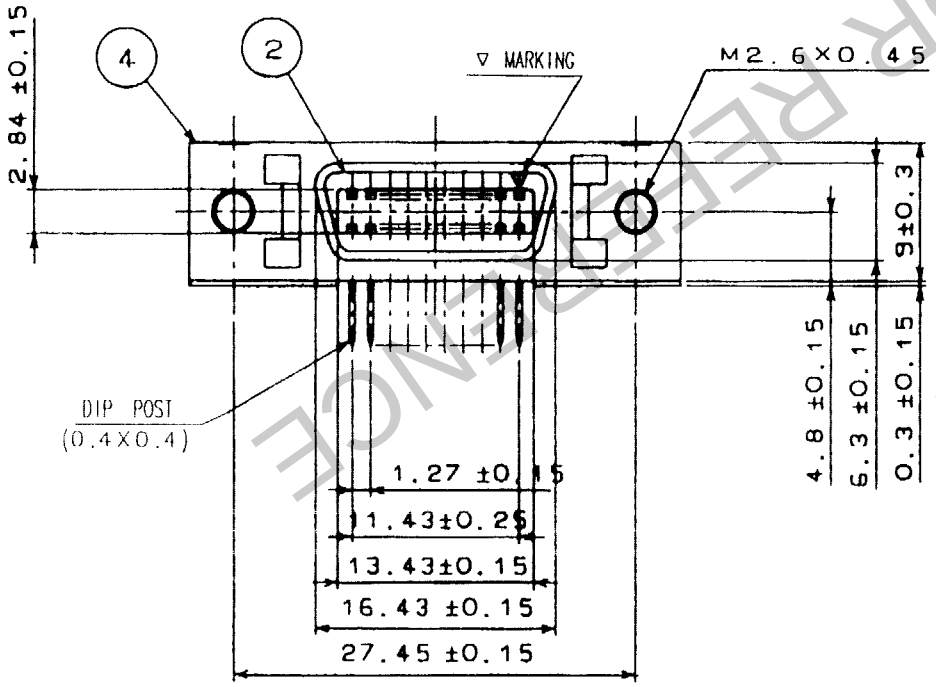

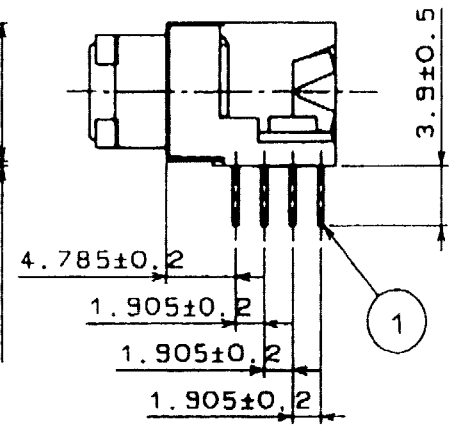

NO.	MATERIAL	FINISH, REMARKS	NO.	MATERIAL	FINISH, REMARKS
3	PBT	(BLACK) UL94V-0	6	STEEL	NICKEL PLATING
2	PBT	(BLACK) UL94V-0	5	PHOSPHOR BRONZE	NICKEL PLATING
1	PHOSPHOR BRONZE	SELECTIVE GOLD PLATING 0.2μm	4	STEEL	NICKEL PLATING

CODE NO.(OLD)	DRAWN	DESIGNED	CHECKED	APPROVED	RELEASED
	T. Hamazaki 03.10.10	T. Hamazaki 03.10.10	Y. Enami 03.10.15	H. Minato 03.10.15	. .

SCALE 2 : 1	DRAWING NO. EDC3-047440-01	PART NO. DX10GM-20S(50)
UNITS mm	HRS HIROSE ELECTRIC CO., LTD	CODE NO. CL230-5177-5-50

1/1

FORM NO.229

TO
Q

HRS DRAWING FOR REFERENCE