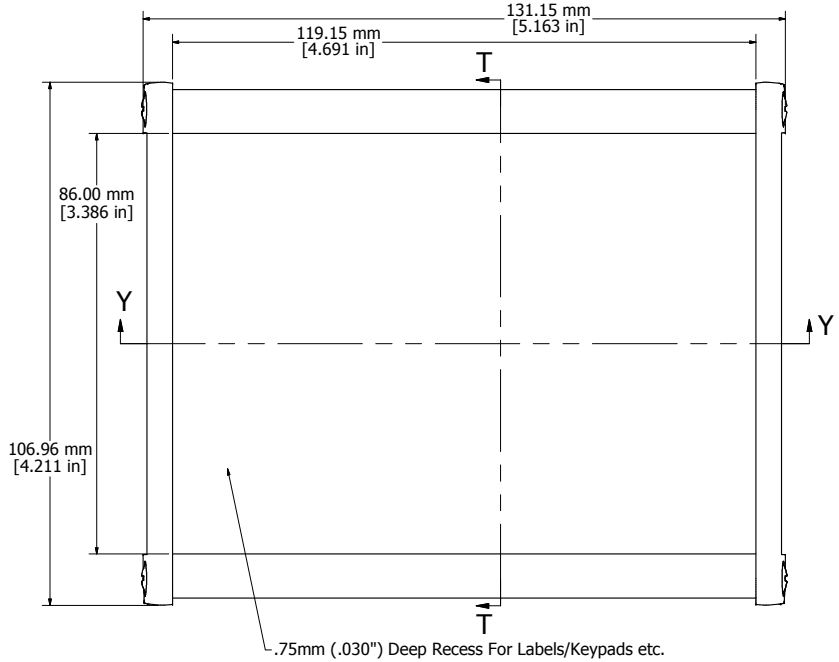


ASSEMBLY - VIEW FROM TOP

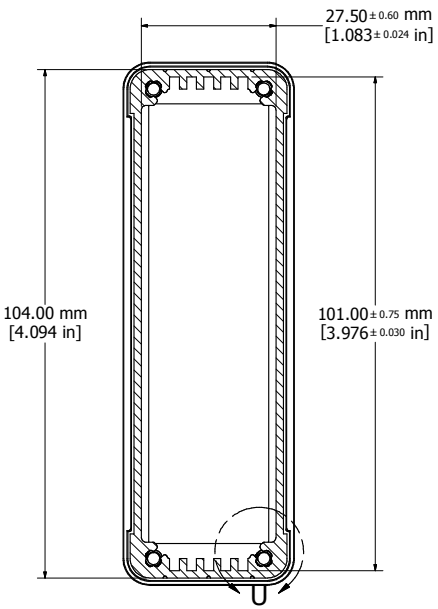


SECTION T-T

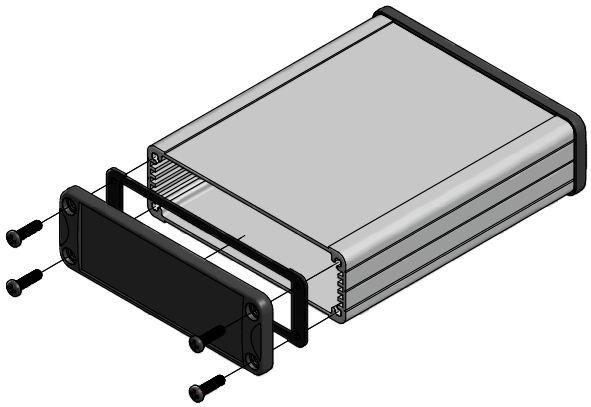

PROTECTION TO IP 65

Enclosures can be Factory Modified ( Milling, Drilling, Printing etc. )
Contact Factory mjm@hammondmfg.com for quotes
Solid models of this enclosure available in STEP or IGES.

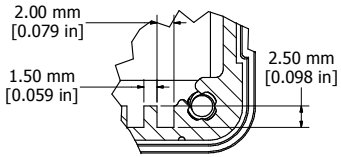


DETAIL U

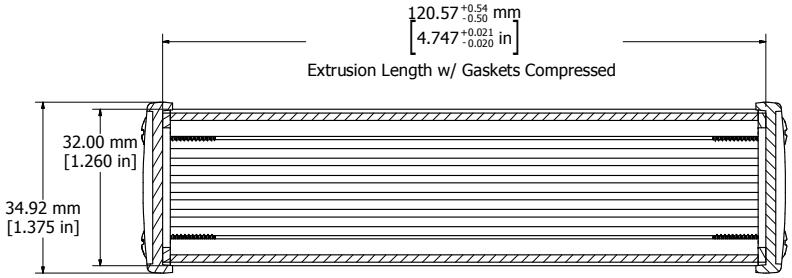


SECTION Y-Y

Fits 120mm (4.724") X 100mm (3.937") PCB

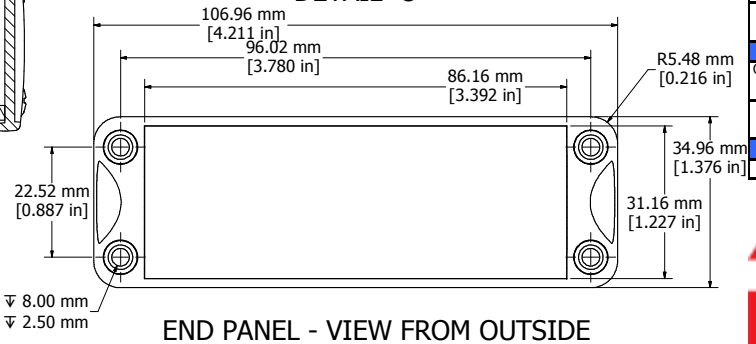


END PANEL - VIEW FROM OUTSIDE

| NOTE |
|---|
| Purchased assembly includes box, end panels, #6 Taptight screws w/ O-Rings, self adhesive rubber feet, and gaskets |
| Box made from Extruded Aluminum 6063. |
| End panels made from ADC-12 Diecast Aluminum with a black powder paint finish. |
| |

| WATERPROOF 1457L1201 | |
|---|---|
| **PART NUMBERS** | |
| Clear anodized box with black powder painted end panels | 1457L1201 |
| Black powder painted box and end panels | 1457L1201BK |
| **EMI/RFI SHIELDED (IP 54)** | |
| Clear anodized box with black powder painted end panels | 1457L1201E |
| Black powder painted box and end panels | 1457L1201EBK |
| **ACCESSORIES** | |
| See website for accessories. | |

HAMMOND MANUFACTURING™

1457L1201

www.hammondmfg.com