PART NAME	JUNCTION BOX w / KNOCKOUTS	PART No.	JB-3956-KO	REVISION DATE	7-18-11

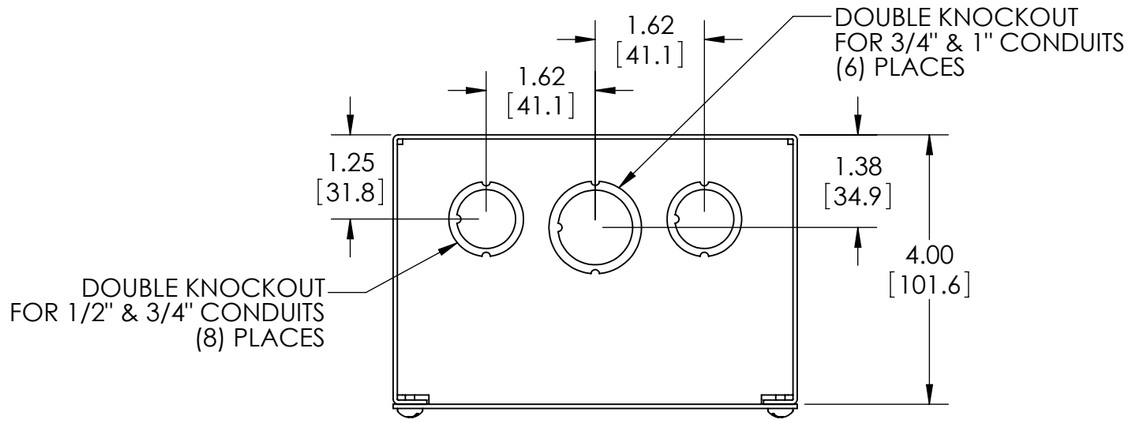

MATERIAL - 16 GA. [1.5mm] STEEL
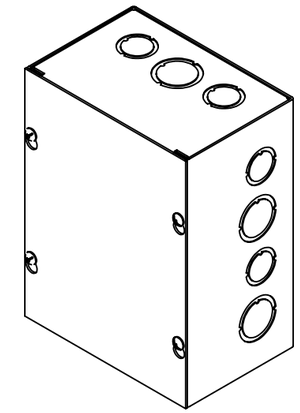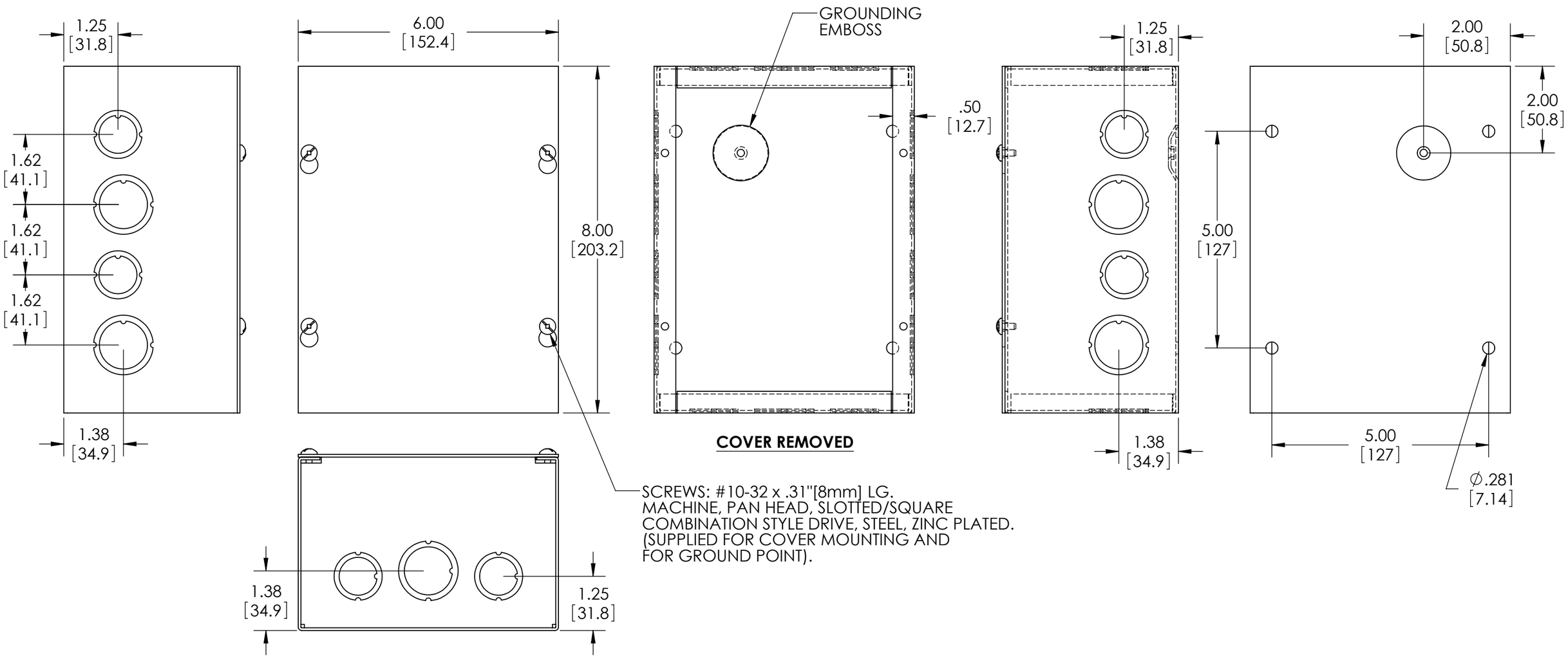
FINISH - SMOOTH GRAY POWDERCOAT