REV	ECN #	DESCRIPTION	DATE	BY
A	N/A	DRAWING RELEASE	9/17/01	PH
B	01-0441	GENERAL DRAWING UPDATES	12/3/01	PH
B1	04-0038	GENERAL DRAWING UPDATES	3/18/04	GP
C	04-0271	REVISED PER LID MODIFICATION	11/4/05	PH
C1	05-0056	ADD Au FLASH PLATING OPTION	2/11/05	DS

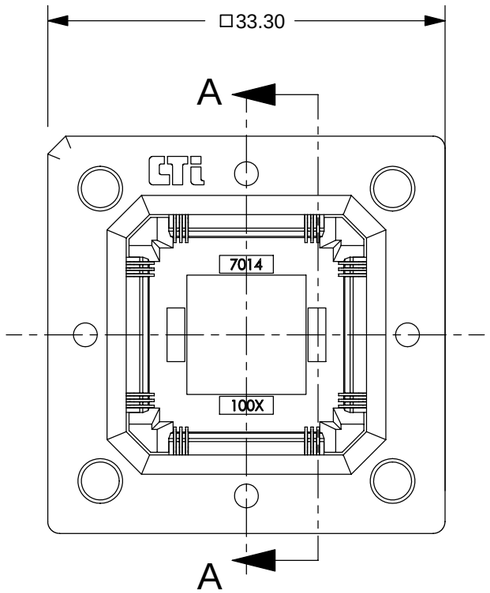

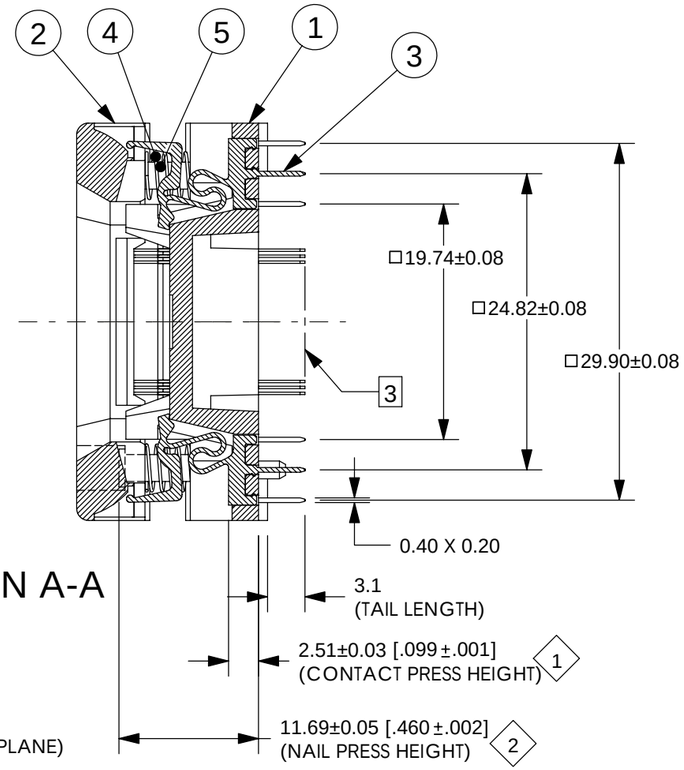

SECTION A-A

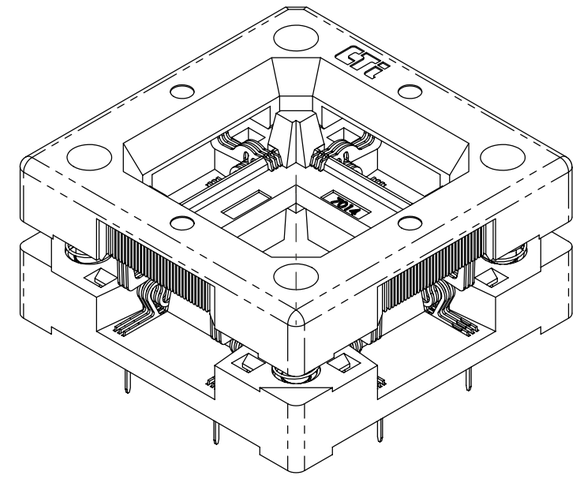

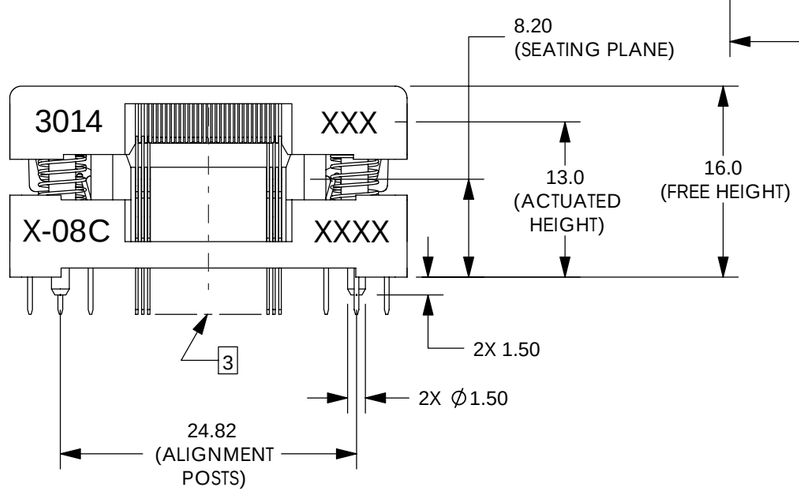

3014 - XXX - X - C

- C: SOCKET ASSEMBLY REVISION
- X: Contact Plating
  - 0 = BeCu w/ Au (Overall) (-X8 contact)
  - 2 = BeCu w/ NiB (-X3 contact)
  - 3 = Pfin w/ Au (Overall) (-X8 contact)
  - 5 = Pfin w/ NiB (-X3 contact)
  - 6 = BeCu w/ SEL Au & Au Flash (-X7 Contact)
  - 7 = Pfin w/SEL Au & Au Flash (-X7 Contact)
- XXX: LEAD COUNT

ITEM	PART NUMBER	QTY	DESCRIPTION	
1	001-492-XX	1	SOCKET BASE	
2	001-493-XX	1	SOCKET LID	
3	002-086-XX	AR	CONTACT, INNER	
4	005-027-00	4	COMPRESSION SPRING	
5	006-027-00	4	CORNER NAIL	

4. THIS DRAWING DOES NOT INCLUDE 0.40MM PITCH SOCKETS.
3. SOCKET IS POPULATED PER DWG. F3014-XXX, XXX = LEAD COUNT, CONTACTS REMOVED FOR CLARITY.
2. MARKING: 2.0 HIGH, COLOR - WHITE. LOCATE AS SHOWN.
1. MATERIAL AND FINISH:
   SOCKET LID AND BASE - POLYETHERIMIDE.
   CONTACTS - PFINODAL, SEE CHART FOR PLATING.
   NAILS AND SPRINGS - STAINLESS STEEL - PASSIVATED.

LEGEND
◇ CRITICAL
2 TOTAL NO. OF ◇ USED

INTERPRET DRAWING IN ACCORDANCE WITH ASME Y14.5M-1994

SIZE: B
PROJECTION

THIS DOCUMENT CONTAINS PROPRIETARY INFORMATION THAT IS THE SOLE PROPERTY OF WELLS-CTI. THIS INFORMATION IS TO BE HELD BY ITS RECIPIENT ON A CONFIDENTIAL BASIS , AND IS NOT TO BE DISCLOSED TO OTHERS OR USED WITHOUT WRITTEN CONSENT OF WELLS-CTI.

DO NOT SCALE

MATERIAL / FINISH: 1
REFERENCE
PROJECT / SERIES: 3014

TOLERANCES
X.XX ± 0.3
X.XXX ± 0.13
X.XXXX ± -----
ANGLE ± 1°

DRAWN	PH	DATE 9/17/01
CHECKED	EO	DATE 9/17/01
ENGINEER	PH	DATE 9/17/01
QUALITY	EP	DATE 9/17/01
MFG. ENGR.	AG	DATE 9/17/01

WELLS-CTI PHOENIX ARIZONA USA

TITLE: REDUCED FORCE QFP 14mm SQ. PACKAGE FAMILY

DRAWING NUMBER: 3014-XXX-X-08 REV. C1

SCALE 2:1 UNITS: in [mm]

CAD NUMBER: 3014-XXX-X-08.SLDDRW

SHEET 1 OF 1