ISSUE 13; February 2012 - RoHS 2011/65/EU

Description

- Standard 7 x 5mm SMD crystal. 7 x 5mm SMD crystal available in three different pad designs and two different package materials.12SMX-A, -C, -D are ceramic package with a resin sealed ceramic lid, hermetically sealed.12SMX-B is a ceramic package with a seam sealed metal lid, hermetically sealed. Please Note: 12SMX-B is the standard package style. For low profile version of a 7 x 5mm crystal please see our 14SMX.For tighter tolerances and stabilities please see our 14SMX. Stock parts available.

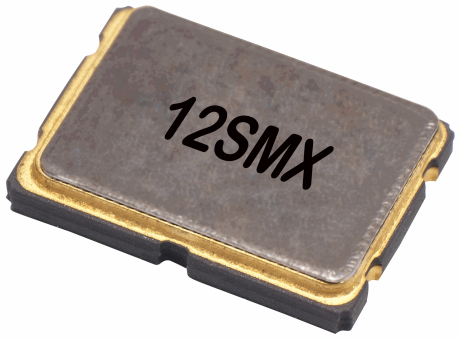

Frequency Range

- Frequency 6.0 to 84.0Mhz
- Frequency Tolerance ±20ppm to ±100ppm

General Specification

- Load Capacitance (CL) 10.0pF to 75.0pF
- Drive Level 100µW max
- Ageing ±5ppm per year max
- Shunt Capacitance (C0) 7pF max

Operating Temperature Ranges

- 0 to 50°C
- -10 to 60°C
- -20 to 70°C
- -40 to 85°C

Environmental Parameters

- Storage Temperature Range: -40 to 85°C

Ordering Information

- Example
  10.0MHz 12SMX-B
  50/50/–20 to 70C/10 FUND
- Frequency*
  Model*
  Variant*
  Frequency Tolerance (@25°C)*
  Frequency Stability (over operating temperature range)*
  Operating Temperature Range*
  Load Capacitance*
  Overtone

Packing Details

- Pack Style: **Bulk** Loose in bulk pack
  Pack Size 100
- Pack Style: **Reel** Tape and reel in accordance with EIA-481-D
  Pack Size 1,000
- Alternative packing options available

Outline (mm) -A = 2 pad (ceramic lid)

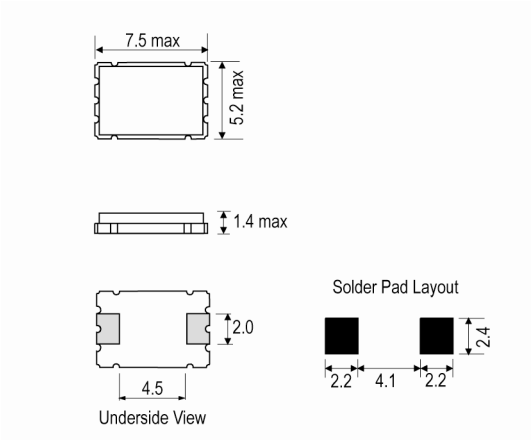

-B = 4 pad (metal lid)

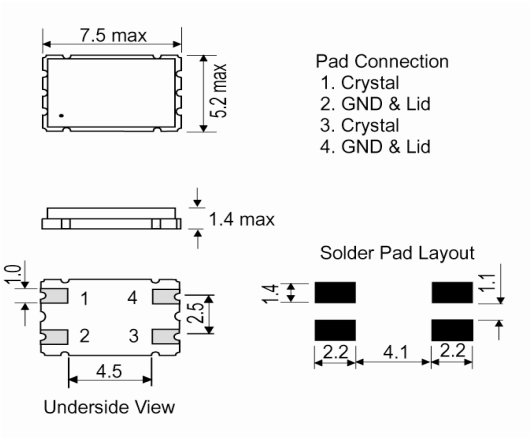

Sales Office Contact Details:

UK: +44 (0)1460 270200
France: +33 (0)5 34 50 91 18
Email: info@iqdfrequencyproducts.com
Germany: +49 (0)7264 9145-0
USA: +1 (0) 408 455 2426
Web: www.iqdfrequencyproducts.com

-C = 2 into 4 pad (ceramic lid)

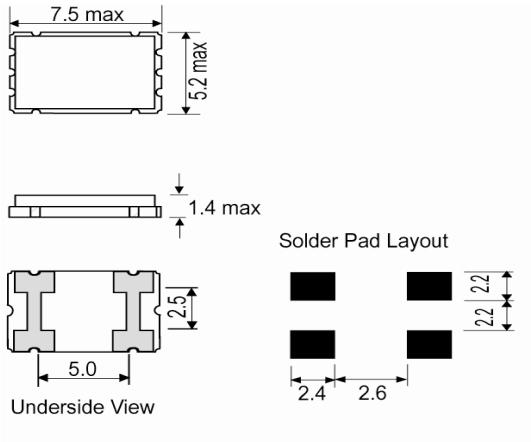

-D = 4 pad (ceramic lid)

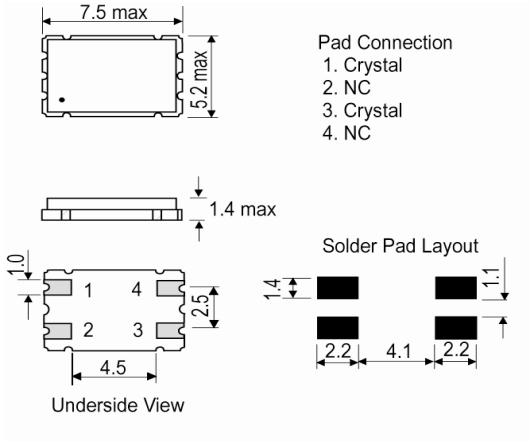

Electrical Specification - maximum limiting values

Frequency Range	Frequency Tolerance	Stability		Temperature Range	ESR Max	Vibration Mode
		Min	Max			
6.0 to <8.0MHz	±20 to ±100ppm	±20ppm ±20ppm ±20ppm ±30ppm	±100ppm	0 to 50°C -10 to 60°C -20 to 70°C -40 to 85°C	150Ω	Fundamental
8.0 to <10.0MHz	±20 to ±100ppm	±20ppm ±20ppm ±20ppm ±30ppm	±100ppm	0 to 50°C -10 to 60°C -20 to 70°C -40 to 85°C	80Ω	Fundamental
10.0 to <16.0MHz	±20 to ±100ppm	±20ppm ±20ppm ±20ppm ±30ppm	±100ppm	0 to 50°C -10 to 60°C -20 to 70°C -40 to 85°C	60Ω	Fundamental
16.0 to <50.0MHz	±20 to ±100ppm	±20ppm ±20ppm ±20ppm ±30ppm	±100ppm	0 to 50°C -10 to 60°C -20 to 70°C -40 to 85°C	40Ω	Fundamental
50.0 to <84.0MHz	±20 to ±100ppm	±20ppm ±20ppm ±20ppm ±30ppm	±100ppm	0 to 50°C -10 to 60°C -20 to 70°C -40 to 85°C	60Ω	3RD Overtone

This document was correct at the time of printing; please contact your local sales office for the latest version

Sales Office Contact Details:

UK: +44 (0)1460 270200
France: +33 (0)5 34 50 91 18
Email: info@iqdfrequencyproducts.com
Germany: +49 (0)7264 9145-0
USA: +1 (0) 408 455 2426
Web: www.iqdfrequencyproducts.com