| CONNECTOR P/N | ØD(μm) | HOUSING COLOR | CABLE TYPE |
|---|---|---|---|
| 106071-2300 | 125.5 | BLACK | SINGLE MODE |
| 106071-3000 | 128.0 | | MULTI MODE |
| 106071-2000 | 125.5 | | SINGLE MODE |
| 106071-5000 | 126.0 | | |
| 106071-1000 | 144.0 | RED | MULTI MODE |

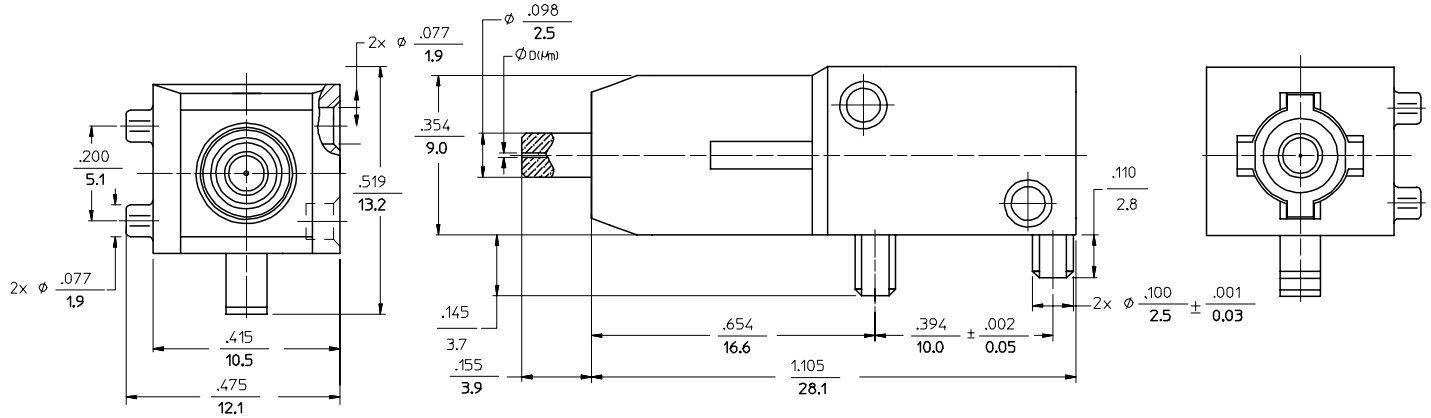


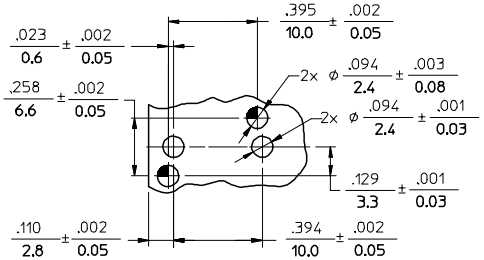


RECOMMENDED MOUNTING HOLES
SCALE: 2.5:1

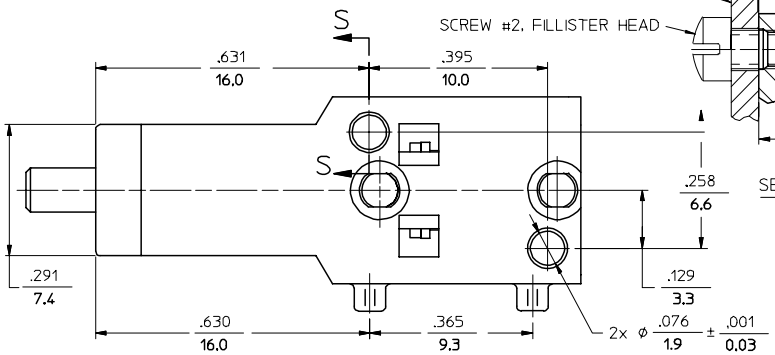


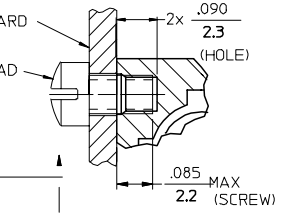


SECTION S-S

| ENTER DESCRIPTION | | | |
|---|---|---|---|
| EC NO: MF2006-0285 | | | |
| DRWN: PGIBLIN | 2005/11/29 | | |
| CHKD: | 2005/11/29 | | |
| APPR: IGUMIN | 2005/11/29 | | |
| REV | DESCRIPTION | | |
| A | | | |

QUALITY SYMBOLS
▼=0
Ⓒ=0

GENERAL TOLERANCES (UNLESS SPECIFIED)

| | mm | INCH |
|---|---|---|
| 4 PLACES | ± --- | ± --- |
| 3 PLACES | ± --- | ± --- |
| 2 PLACES | ± --- | ± --- |
| 1 PLACE | ± --- | ± --- |
| ANGULAR ±1/2° | | |

DRAFT WHERE APPLICABLE MUST REMAIN WITHIN DIMENSIONS

DIMENSION STYLE: IN/MM
SCALE: 5:1
DESIGN UNITS: INCH
THIRD ANGLE PROJECTION

DRAWN BY: PGIBLIN DATE: 2005/10/27
CHECKED BY: DATE:
APPROVED BY: DATE:

TITLE: BSC-2 CONNECTOR (TUNABLE)

molex MOLEX INCORPORATED

MATERIAL NO.: SEE TABLE
DOCUMENT NO.: SD-106071-XX00
SHEET NO.: 1 OF 1
SIZE: C

THIS DRAWING CONTAINS INFORMATION THAT IS PROPRIETARY TO MOLEX INCORPORATED AND SHOULD NOT BE USED WITHOUT WRITTEN PERMISSION