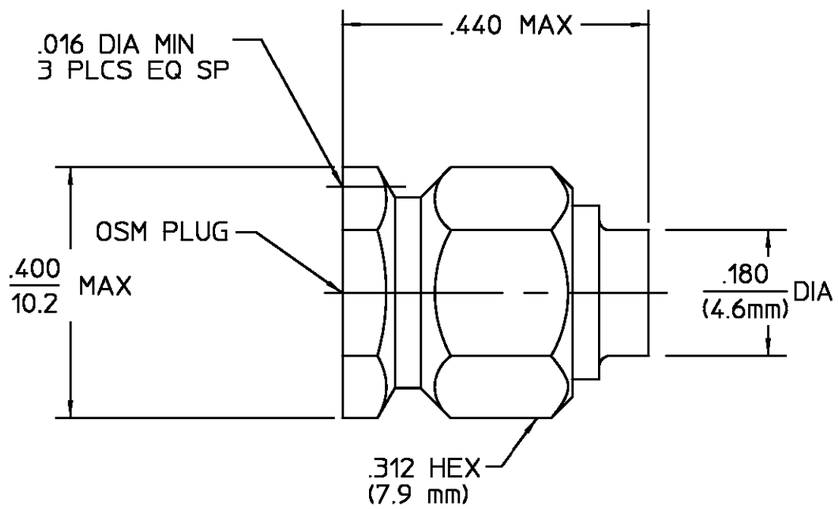


| DESIGNED FOR USE WITH .141 DIA S.R. CABLE | |
|---|---|
| CABLE ENTRY DIAMETER MINIMUM | |
| CONTACT | .039 |
| HOUSING | .144 |

REVISIONS

| REV | DESCRIPTION | DATE | APPROVED |
|---|---|---|---|
| $01_1$ | REDRAWN ON CAD ECN 94-0474 RMF | 2/10/95 | RMF 12/10/95 |

| COMPONENT | MATERIAL | FINISH |
|---|---|---|
| HOUSING | STAINLESS STEEL PER ASTM-A484 AND ASTM-A582, TYPE 303 | GOLD PLATE PER MIL-G-45204 |
| COUPLING NUT | STAINLESS STEEL PER ASTM-A484 AND ASTM-A582, TYPE 303 | PASSIVATE PER ASTM-A-380 |
| DIELECTRIC | TFE FLUOROCARBON PER ASTM-D-1457 | N/A |
| CENTER CONTACT | BERYLLIUM COPPER PER ASTM B 196, ALLOY C17300, CONDITION H | GOLD PLATE PER MIL-G-45204 |
| RETAINING RING | BERYLLIUM COPPER PER ASTM B 194, ALLOY C17200, CONDITION H | N/A |
| GASKET | SILICONE RUBBER PER ZZ-R-765 | N/A |

| ELECTRICAL | MECHANICAL | ENVIRONMENTAL |
|---|---|---|
| Nominal Impedance (Ohms) 50 | Interface Dimensions MIL-STD-348, Fig. 310.1 | Temperature Rating -65°C to 105°C |
| Frequency Range (GHz) DC to 18.0 | Recommended Mating Torque 7 to 10 in-LBs | Vibration MIL-STD-202, Method 204, Condition D |
| Volt Rating (VRMS MAX) @ Sea Level 500 | Mating Characteristics: | Shock MIL-STD-202, Method 213, Condition I |
| VSWR 1.05 + .008f(GHz) | Insertion (MAX Lbs) N/A | Thermal Shock MIL-STD-202, Method 107, Condition B, Except High Temp 115°C |
| Insertion Loss (dB MAX) .03 $\sqrt{f(GHz)}$ | Withdrawal (MIN Oz) N/A | Moisture Resistance MIL-STD-202, Method 106, |
| RF Leakage (dB MIN) -(90-f(GHz) | Force to Engage and Disengage (In/Lbs MAX) 2.0 | Corrosion - MIL-STD-202, Method 101, Condition B, 5% salt spray |
| Corona, 70,000 Ft (VRMS MIN) 375 | Center Contact Captivation | |
| Dielectric Withstanding Voltage (VRMS MIN) @ Sea Level 1000 | Axial (Lbs) N/A | |
| Contact Resistance (Milliohms MAX) | Radial (In/Oz) N/A | |
| Center Contact 3.0 | Cable Retention | |
| Outer Contact 2.0 | Axial Force (Lbs) 60 | |
| Cable to Housing 0.5 | Torque (In/Oz) 55 | |
| RF High Potential @ Sea Level (VRMS MIN @ 5 MHz) 1000 | Weight (Grams) T.B.D. | |
| I.R.(Megohms MIN) 5,000 | | |

UNLESS OTHERWISE SPECIFIED DIMENSIONS ARE IN INCHES
TOLERANCE ON
FRAC. ± 1/64 DEC. ±.005 ANGLES ± 1°

DRAWN BY TN DATE 7/22/82
CHECKED BY G.S. 7/20/82
APP'D BY RMF 7/23/82

AMP

*AMP Incorporated*
140 Fourth Avenue
Waltham, MA 02451-7599

These drawings and specifications are the property of Omni Spectra Incorporated and shall not be reproduced or copied or used in whole or in part as the basis for the manufacture or sale of item(s) without written permission.

USE ASS'Y PROCEDURE

NO. A.P. 408-04919 (20-544)

TITLE OSM STRAIGHT CABLE PLUG DIRECT SOLDER ATTACHMENT M39012B3002 CAT B

| SIZE | CODE IDENT NO. | | REV |
|---|---|---|---|
| B | 26805 | 2001-8002-92 | $01_1$ |
| SCALE 5:1 | | | SHEET 1 OF 1 |

CUSTOMER DRAWING

AMP PART # 1050776-1
SHEET 1 OF 1 REV A