THIS DRAWING IS UNPUBLISHED. RELEASED FOR PUBLICATION 20
© COPYRIGHT 20 BY - ALL RIGHTS RESERVED.

REVISIONS 変更

P	LTR	DESCRIPTION		DATE	DWN	APVD
	A	ADDED -2	ECR-14-008266	04JUN2014	K.Y	Y.N
	A1	CORRECT ERROR	ECR-14-008343	10JUL2014	K.Y	Y.N

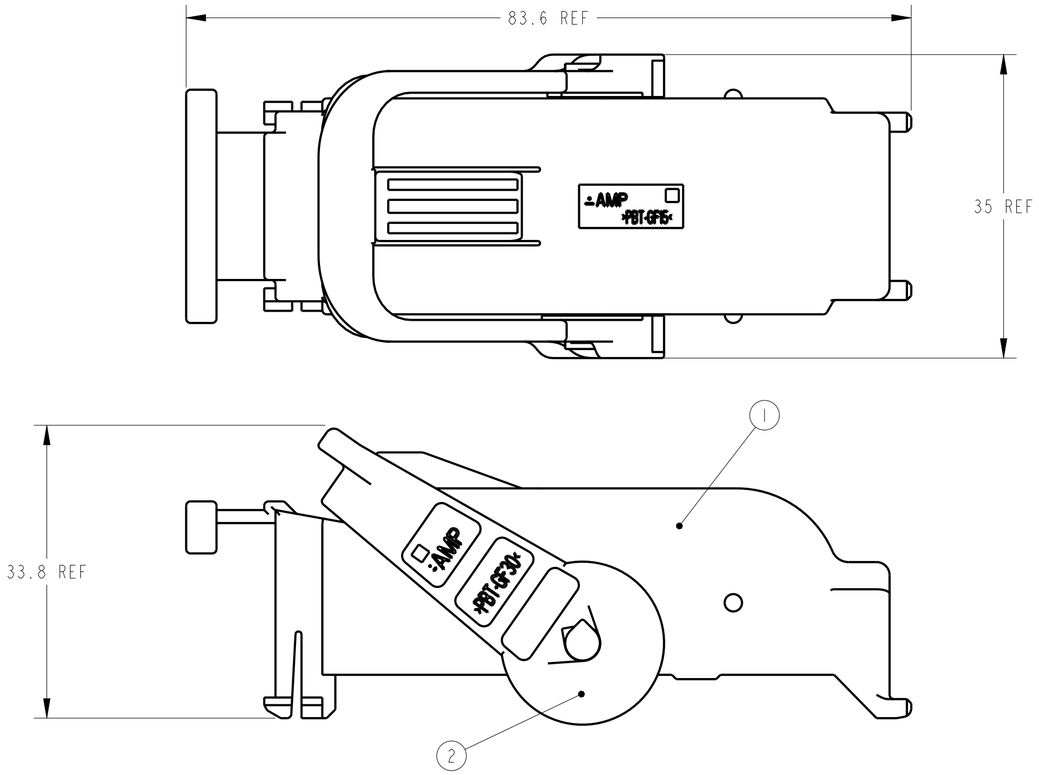

1473247-1
STANDARD LEVER TYPE

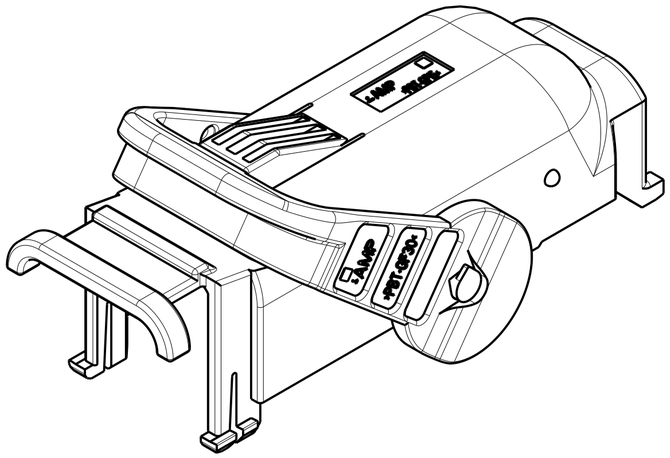

1473247-2
LONG LEVER TYPE

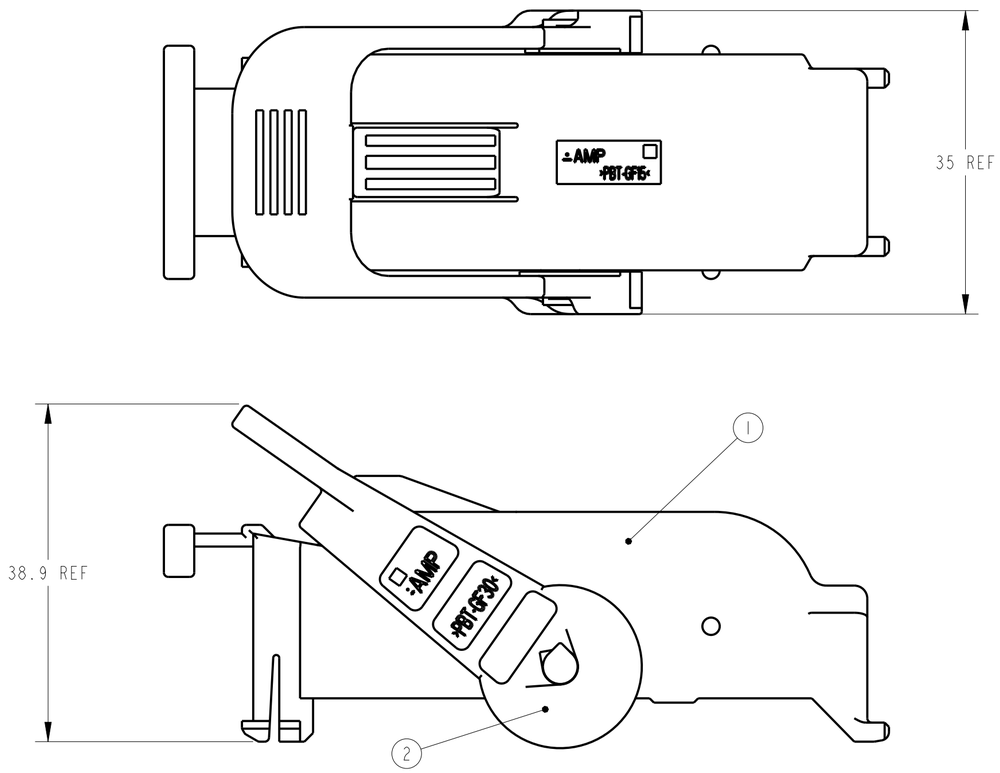

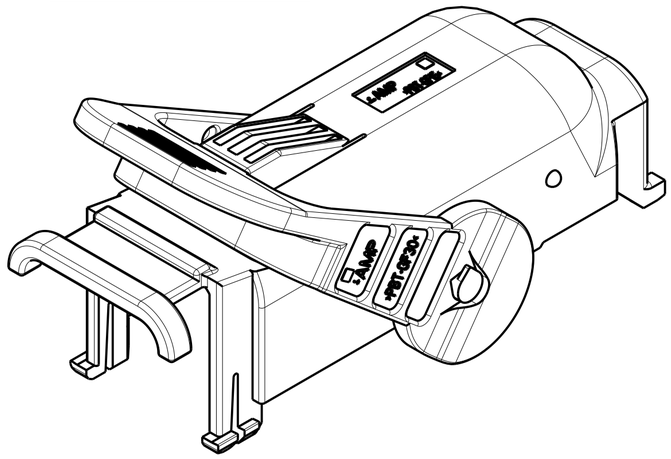

1. PART NUMBER OF PLUG HOUSING ASSEMBLY TO BE APPLIED ; P/N 1473244-1
2. INSTRUCTION SHEET NO ; 411-78008
3. 114-18021, 114-18050

1. 適用プラグハウジングアッセンブリ型番は、P/N 1473244-1
2. 取扱説明書 NO ; 411-78008
3. 114-18021, 114-18050

1	-	1473249-2	LONG LEVER	WHITE	2
-	1	1473249-1	STANDARD LEVER	BLACK	
1	1	1473248-1	HARNESS COVER	BLACK	1
-2	-1	PART NO	PART NAME	FINISH/COLOR	NO
16.4	14.9	WEIGHT(g)			

THIS DRAWING IS A CONTROLLED DOCUMENT.

DIMENSIONS: 単位: 粍 mm

TOLERANCES UNLESS OTHERWISE SPECIFIED:
一般公差 ±0.3
0 PLC ±
1 PLC ±0.5
2 PLC ±0.13
3 PLC ±0.013
4 PLC ±0.0001
ANGLES ±3°00′

MATERIAL 材料: PBT -
FINISH 仕上: SEE TABLE -

DWN K.YOSHIMURA 04JUN2014
CHK Y.NOGUCHI 04JUN2014
APVD T.KOHNO 04JUN2014
PRODUCT SPEC 製品規格: 108-5793
APPLICATION SPEC 取付適用規格: SEE NOTE 3
WEIGHT: SEE TABLE

TE Connectivity

NAME 名称: LEVER ASSY TYPE-A SEALED 81 POS PLUG HSG MQS CLEAN BODY / JPT -

SIZE A2 | CAGE CODE - | DRAWING NO 番号 C-1473247 | RESTRICTED TO -

Customer Drawing | SCALE 尺度 2:1 | SHEET 1 OF 1 | REV A1

1471-9 (3/13)