84854

MATERIAL NO.	ENGINEERING NO.	LENGTH
848548021	84854-8021	.5M
848548022	84854-8022	1M
848548023	84854-8023	2M
848548024	84854-8024	3M
848548025	84854-8025	4M
848548026	84854-8026	5M
848548027	84854-8027	6M
848548032	84854-8032	1 FT
848548033	84854-8033	3 FT
848548034	84854-8034	4 FT
848548035	84854-8035	9 FT

NOTES:
1. MATERIAL: SEE TABLE
2. FINISHES: SEE TABLE
3. MATES WITH: DEVICE-NET RECEPTACLE
4. ASSEMBLY IS RoHS COMPLIANT

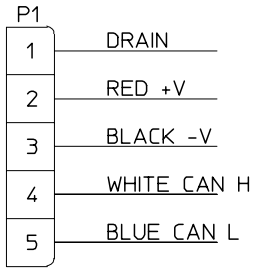

WIRING DIAGRAM

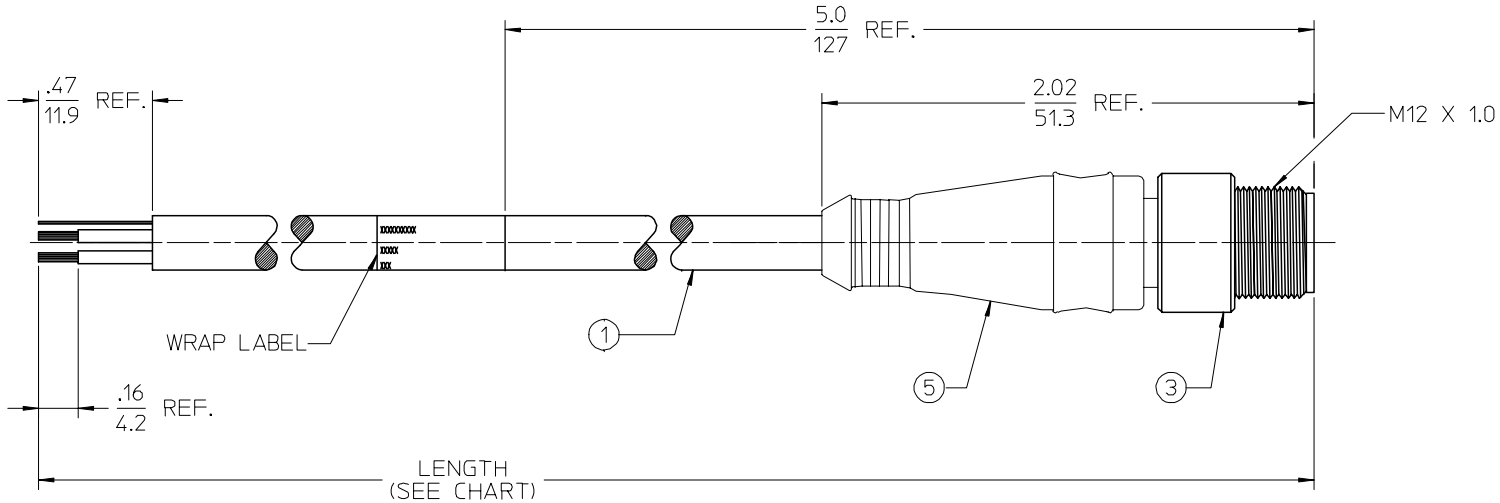

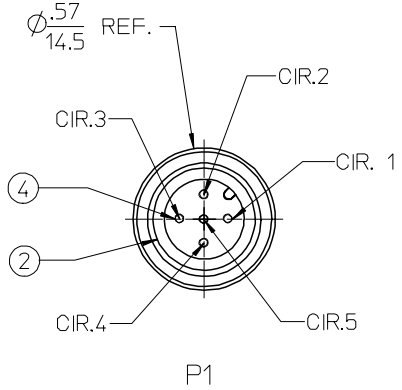

ITEM	QTY.	DESCRIPTION	MATERIAL	FINISH
5	1	OVERMOLD	PVC	GRAY
4	5	CONTACT PINS	Cu ALLOY	GOLD PLATED
3	1	COUPLING, MALE THD, METRIC	BRASS	NICKEL PLATED
2	1	INSULATOR, 5/C, DC KEY	NYLON	BLACK
1	1	CABLE, DEVICE-NET, THIN	PVC	GRAY

RELEASED
EC NO: ETC2008-0052
DRWN:RSTONE 2007/08/20
CH'KD:J.MACNEIL 2007/09/21
APPR:JMACNEIL 2007/09/24
REV A
DESCRIPTION

QUALITY SYMBOLS
▼=0
▽=0

GENERAL TOLERANCES (UNLESS SPECIFIED)

	mm	INCH
4 PLACES	± ---	± ---
3 PLACES	± ---	± ---
2 PLACES	± ---	± .01
1 PLACE	± 0.25	± ---
ANGULAR ±1/2°		

DRAFT WHERE APPLICABLE MUST REMAIN WITHIN DIMENSIONS

DIMENSION STYLE: IN/MM
SCALE: 4:1
DESIGN UNITS: INCH
THIRD ANGLE PROJECTION

DRAWN BY: R.STONE DATE: 2007/08/20
CHECKED BY: J.MACNEIL DATE: 2007/08/22
APPROVED BY: J.MACNEIL DATE: 2007/08/22

TITLE: MICRO-C PLUG, MALE METRIC, 5/C, DEV-NET DC KEY

molex MOLEX INCORPORATED

MATERIAL NO.: SEE CHART
DOCUMENT NO.: SD-84854-018
SHEET NO.: 1 OF 1
SIZE: B

THIS DRAWING CONTAINS INFORMATION THAT IS PROPRIETARY TO MOLEX INCORPORATED AND SHOULD NOT BE USED WITHOUT WRITTEN PERMISSION

tb_frame_B_P_ME_T
Rev. E 2006/04/15