THIS DRAWING IS UNPUBLISHED. RELEASED FOR PUBLICATION -,- .
© COPYRIGHT - By - ALL RIGHTS RESERVED.

LOC	DIST
FT	0

REVISIONS

P	LTR	DESCRIPTION	DATE	DWN	APVD
	G3	REVISED PER ECO-12-021870	14DEC12	KH	MB

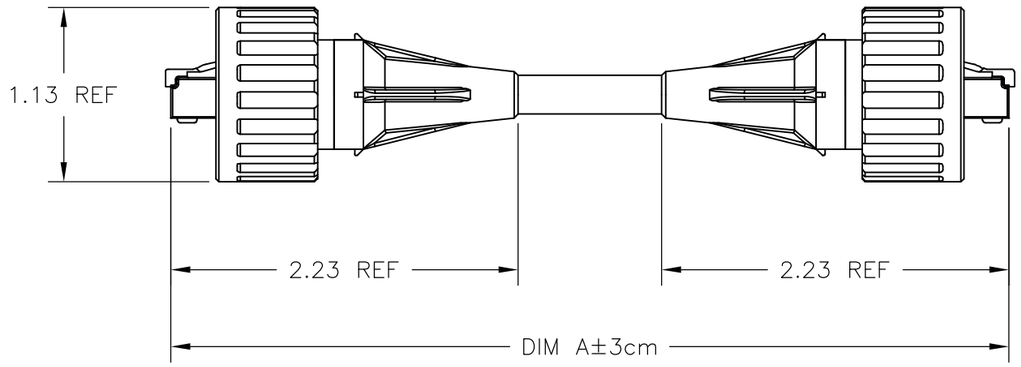

	DIM A	PART NO.
	10 METERS +39.69cm -0	1-1546452-6
	31 METERS +62.23cm -0	1-1546452-5
	16 METERS +62.23cm -0	1-1546452-4
	8 METERS +31.75cm -0	1-1546452-3
	5 METERS +16.51cm -0	1-1546452-2
	2 METERS +8.89cm -0	1-1546452-1
SUPERSEDED	31 METERS	1546452-5
SUPERSEDED	16 METERS	1546452-4
SUPERSEDED	8 METERS	1546452-3
SUPERSEDED	5 METERS	1546452-2
SUPERSEDED	2 METERS	1546452-1

THIS DRAWING IS A CONTROLLED DOCUMENT.

DIMENSIONS: INCHES

TOLERANCES UNLESS OTHERWISE SPECIFIED:

0 PLC	± -
1 PLC	± -
2 PLC	± .02
3 PLC	± .005
4 PLC	± -
ANGLES	± 2°

MATERIAL -

FINISH -

DWN S SCHLEGEL 12NOV02
CHK H WAKEEM 11/12/02
APVD H WAKEEM 11/12/02
PRODUCT SPEC —
APPLICATION SPEC —
WEIGHT —

TE Connectivity

NAME
INDUSTRIAL ETHERNET CORDSET,
PROPLEX CABLE, DOUBLE ENDED INDUSTRIAL
—

SIZE	CAGE CODE	DRAWING NO	RESTRICTED TO
A3	00779	C-1546452	—

CUSTOMER DRAWING

SCALE	SHEET	REV
NTS	1 OF 1	G3