RoHS compliant

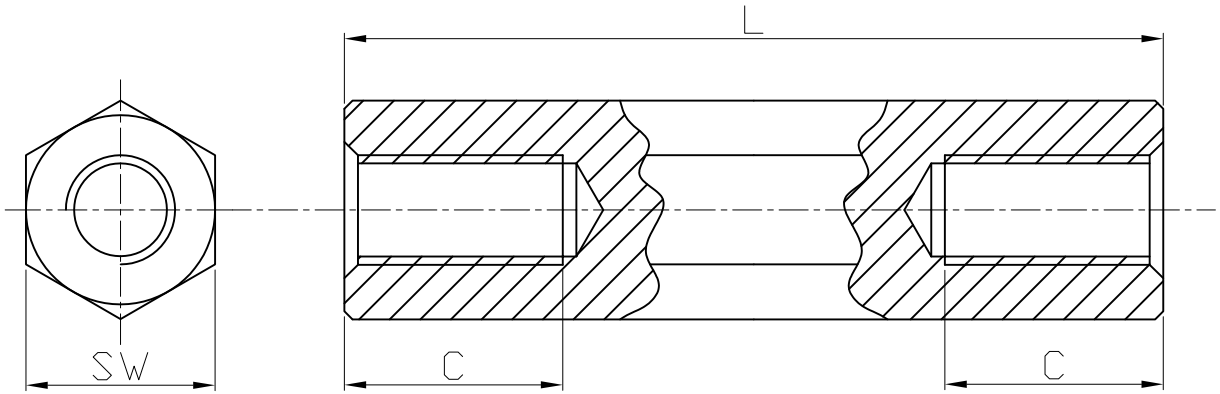

Width across flat(SW)5
Thread M2.5
PU=100 pcs

Option	Dimensions	
	L	C min
A	5	5
B	8	8
C	10	10
D	12	12
E	15	15
F	18	18
G	20	20
H	25	6
K	30	6
③ L	40	6

Material: Brass, nickel plated
③

Scale	1:1					Date	Name	Customer-No.
TOLERANCE					Drawn	20.08.2009	Dean	
X.	±X				Approved	10.03.2010	Andy	ASSMANN WSW-No. V6516x
X.X	±X							
X.XX	±X	③	Add material and plating, add P/N	11.03.2015	A. Plate			Drawing-No. ASS 0916 HS rev03
DIM	TOL	②	Modify drawing layout	10.03.2010	Dean			
X.°	±X°	①	Drawn	20.08.2009	Dean			
X.X°	±X°							Replace Sheet
Angle	TOL	Id.	Modification	Date	Name			

ASSMANN WSW components