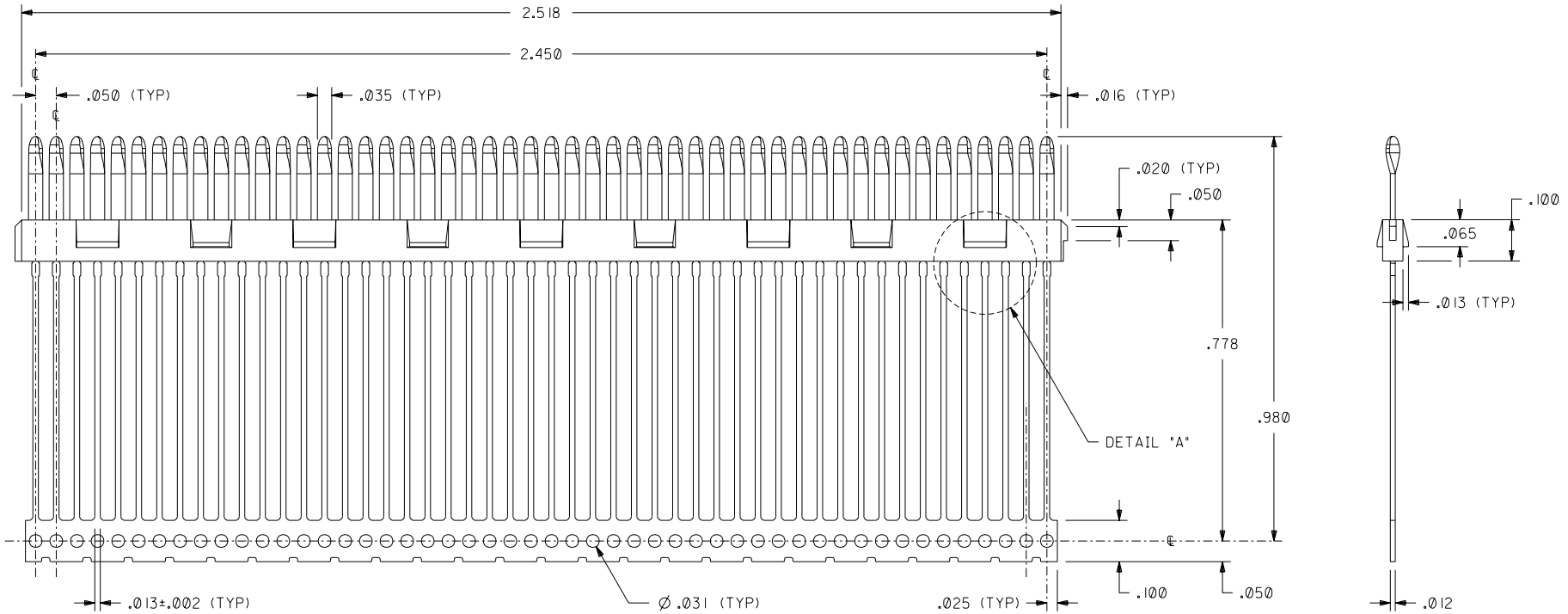

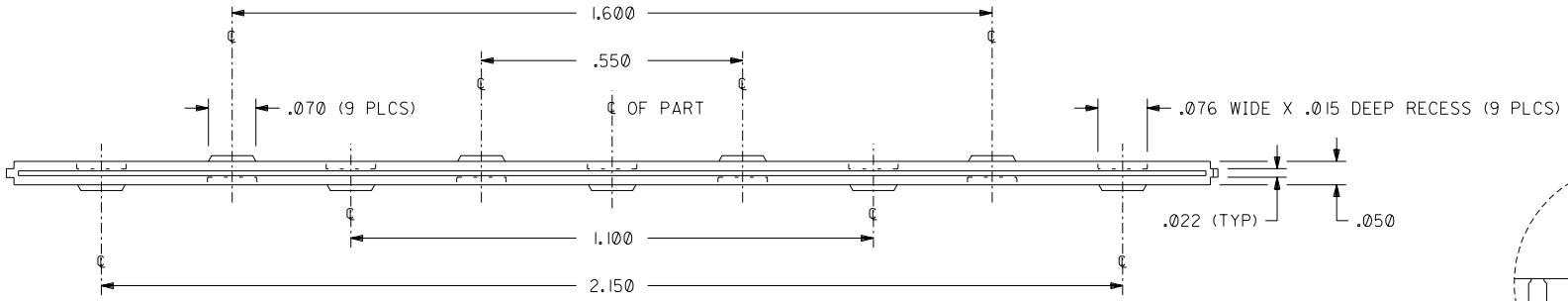

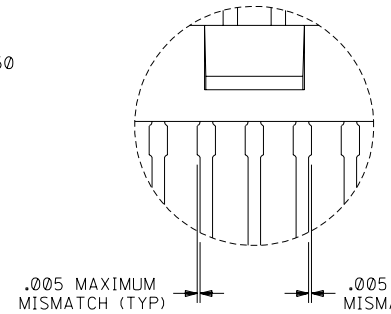

DETAIL "A"
SCALE 10X

NOTE FOR LEAD FREE CONVERSION:

THE PRIMARY SHIPPING CARTON WILL BE LABELED "COMPLIANT TO RoHS DIRECTIVE 2002/95/EC AND ELV ANNEX II OF DIRECTIVE 2000/53/EC". CARTONS WITHOUT THIS LABEL MAY CONTAIN PRODUCT WITH LEAD.

NOTES:

1) MATERIALS:
INSULATOR IS GLASS FILLED LCP (LIQUID CRYSTAL POLYMER), U.L. 94 V-0, COLOR: BLACK;
TERMINALS ARE A PHOSPHOR BRONZE ALLOY, .012" THICK.

2) TERMINAL PLATING:
30 MICROINCHES/(0.762 MICROMETERS) MINIMUM GOLD IN SELECTE AREA;
100 MICROINCHES/(2.54 MICROMETERS) MINIMUM TIN IN SELECTE AREA;
OVER NICKEL UNDERPLATE OVERALL.

3) PARTS USED IN CONJUNCTION WITH MOLEX PRODUCT SPECIFICATION #PS-71719-9999.

4) PACKAGING PER MOLEX SPECIFICATION #PK-70873-0252.

5) PARTS CONFORM TO MOLEX APPLICATION SPECIFICATION #AS-71715-9999.

LTR.	REVISIONS	LTR.	REVISIONS
		B	LEADFREE ECN# UCP2004-1998 DMORGAN 04/04/16
		A	INITIAL RELEASE PER ECN. #U6-1324 04/24/96 GLT

DIMENSIONS SHOWN ■ INCH

UNLESS OTHERWISE SPECIFIED TOLERANCES: ANGULAR ± 1/2°

	INCH	METRIC
3 PLACE	± .010	---
2 PLACE	± ---	± ---
1 PLACE	---	± ---

DRAFT WHERE APPLICABLE MUST REMAIN WITHIN DIMENSIONS

DRWG. BY GLT | CHK'D. BY GLT
APP'D. BY GWF | SCALE 5 : 1

MFG. | SH. | REV.

▽ = 0 ▼ = 0 REVISE ONLY ON CAD SYSTEM

TITLE .050" PITCH LFH, 50 CKT. MALE INSERT-MOLDED CONTACT STRIP, SALES DETAIL

molex MOLEX INCORPORATED LISLE,ILL. 60532 U.S.A.

SHEET NO. 1 OF 1 | DATE 04/23/96

PART NO. 71715-4001 | DRWG. NO. SDA-71715-4001

FILE NAME S71715D4 DGN

THIS DRAWING CONTAINS INFORMATION THAT IS PROPRIETARY TO MOLEX INC. AND SHOULD NOT BE USED WITHOUT WRITTEN PERMISSION.

DIV. CPP | SIZE C

71715