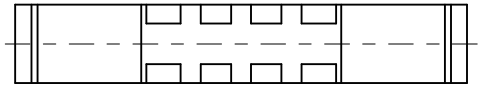

注記

1. フィメール　アッセンブリ（仮想線）に取り付けた時の寸法を示す。
2. 適合フィメール　アッセンブリ：5320シリーズ
3. 材質：PBTP UL94V-0
   色：黒色

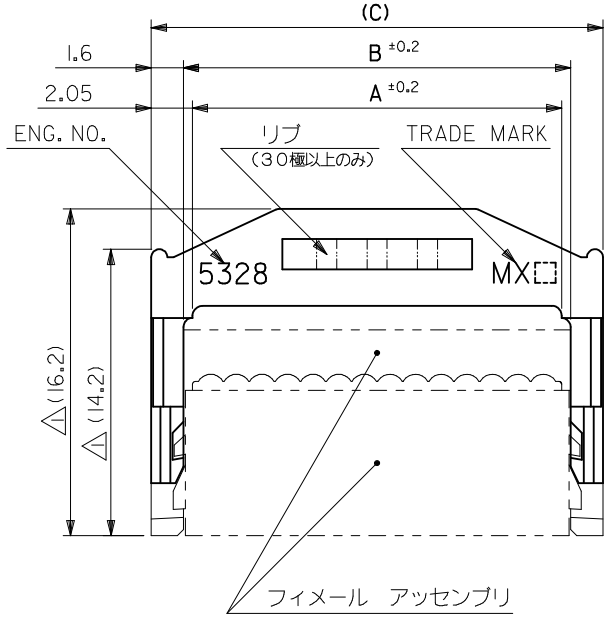

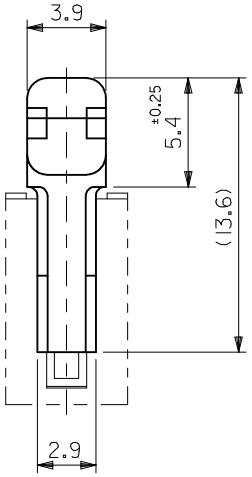

42.73	39.53	38.63	15-25-1303	5328-30	30
C	B	A	EDP NO.	ENG. NO.	極数

REVISED & REDRAWN
EC NO: J2013-0569
DRWN:KMATSUYAMA 2012/12/05
CH'KD:KASAKAWA 2012/12/18
APPR:YOITO 2012/12/19
DESCRIPTION
REV A

GENERAL TOLERANCES (UNLESS SPECIFIED)

10 UNDER	±0.2
10 OVER 30 UNDER	±0.25
30 OVER	±0.3
ANGULAR ±3 °	

DRAFT WHERE APPLICABLE MUST REMAIN WITHIN DIMENSIONS

DIMENSION STYLE: MM ONLY
SCALE: 4:1
DESIGN UNITS: METRIC
THIRD ANGLE PROJECTION

DRAWN BY: KMATSUYAMA DATE: 2012/12/05
CHECKED BY: KASAKAWA DATE: 2012/12/05
APPROVED BY: YOITO DATE: 2012/12/19

TITLE: QIK FLECS STRAIN RELIEF JAPANESE ONLY

molex

MATERIAL NO.: SEE CHART
DOCUMENT NO.: SD-5328-001
SHEET NO.: 1 OF 1
SIZE: A3

THIS DRAWING CONTAINS INFORMATION THAT IS PROPRIETARY TO MOLEX INCORPORATED AND SHOULD NOT BE USED WITHOUT WRITTEN PERMISSION