THIS DRAWING IS UNPUBLISHED. RELEASED FOR PUBLICATION -,- .
© COPYRIGHT - BY TYCO ELECTRONICS CORPORATION. ALL RIGHTS RESERVED.

LOC	DIST
AJ	16

REVISIONS

P	LTR	DESCRIPTION	DATE	DWN	APVD
	G	REVISED PER EC 0S14-0449-04	03JAN05	BM	JL

1. BRASS PER QQ-B-626
2. TIN PLATE PER ASTM-B-545
3. SILVER PLATE PER QQ-S-365
4. PLATED WITH .000030 GOLD ASTM-B488 OVER .000030 NICKEL QQ-N-290

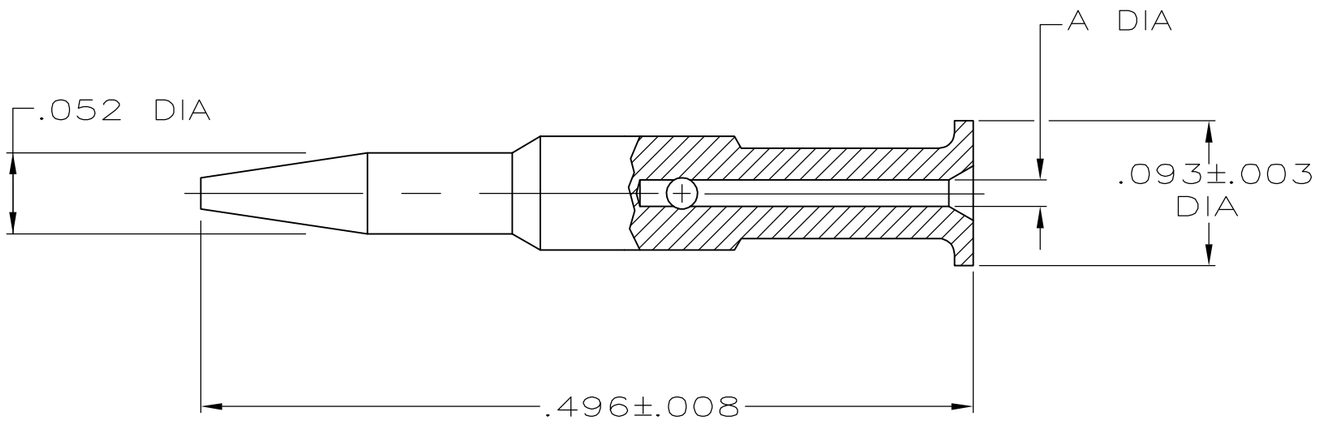

	A	FINISH	PART #
	.015	2	9-227322-1
	.024	2	9-227322-0
	.018	4	1-227322-4
	.024	4	227322-8
OBSOLETE	.024	3	227322-7
	.024	2	227322-6
	.015	4	227322-4
OBSOLETE	.015	3	227322-3
	.015	2	227322-2

THIS DRAWING IS A CONTROLLED DOCUMENT.

DIMENSIONS: INCHES

TOLERANCES UNLESS OTHERWISE SPECIFIED:

0 PLC	± -
1 PLC	± -
2 PLC	± -
3 PLC	± .002
4 PLC	± -
ANGLES	± -

MATERIAL 1

FINISH SEE TABLE

DWN M. SNEED 6-4-90
CHK D.LAMAN 7-6-90
APVD D. LAMAN 07-09-90 A.K. PHILLIPS
PRODUCT SPEC — D.LAMAN
APPLICATION SPEC —
WEIGHT —

tyco Electronics
Tyco Electronics Corporation
Harrisburg, Pa 17105-3608

NAME CONTACT, SERIES BNC
7-9-90

SIZE	CAGE CODE	DRAWING NO	RESTRICTED TO
A3	00779	C-227322	—

CUSTOMER DRAWING | SCALE 10:1 | SHEET 1 OF 1 | REV G

AMP 1470-19 REV 31MAR2000