THIS DRAWING IS UNPUBLISHED. RELEASED FOR PUBLICATION ,19 .
© COPYRIGHT 19 BY AMP INCORPORATED. ALL RIGHTS RESERVED.

LOC	DIST
AA	22

REVISIONS

P	LTR	DESCRIPTION	DATE	DWN	APVD
	C	REV; EC 0G7A-0210-98	08FEB99	DLD	CMB

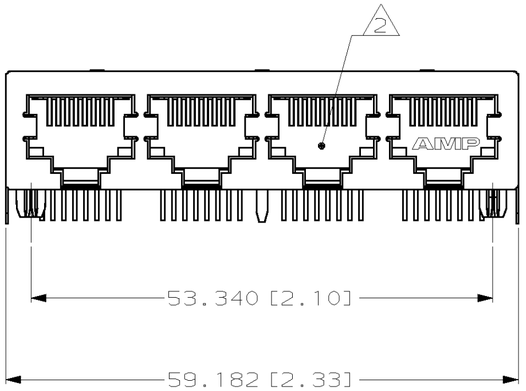

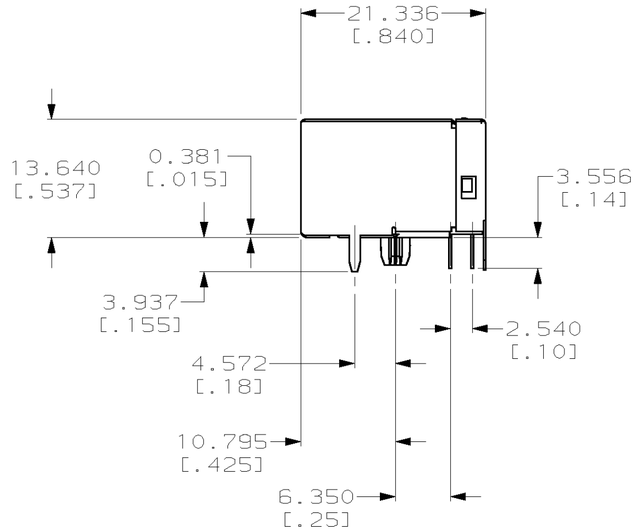

1. MATERIAL: HOUSING - PCT POLYESTER, BLACK, IR COMPATIBLE, UL 94V-0.
TERMINALS - 0.33[.013] THICK PHOS BRONZE PLATED WITH 1.27øm[.000050] MINIMUM HARD GOLD ON LOCALIZED AREA AND 3.81øm [.000150] MINIMUM TIN-LEAD IN SOLDER AREA OVER 1.27µm [.000050] MINIMUM NICKEL UNDERPLATE.

2. JACK CAVITY CONFORMS TO FCC RULES AND REGULATIONS, PART 68 SUBPART F.

3. ALL DIMENSIONS ARE NOMINAL UNLESS OTHERWISE SPECIFIED.

4. CAUTION: CATEGORY 5 JACK SOLDER TAIL POSITIONS DO NOT FOLLOW SAME NUMBER SEQUENCE AS THAT OF THE TRADITIONAL JACKS.

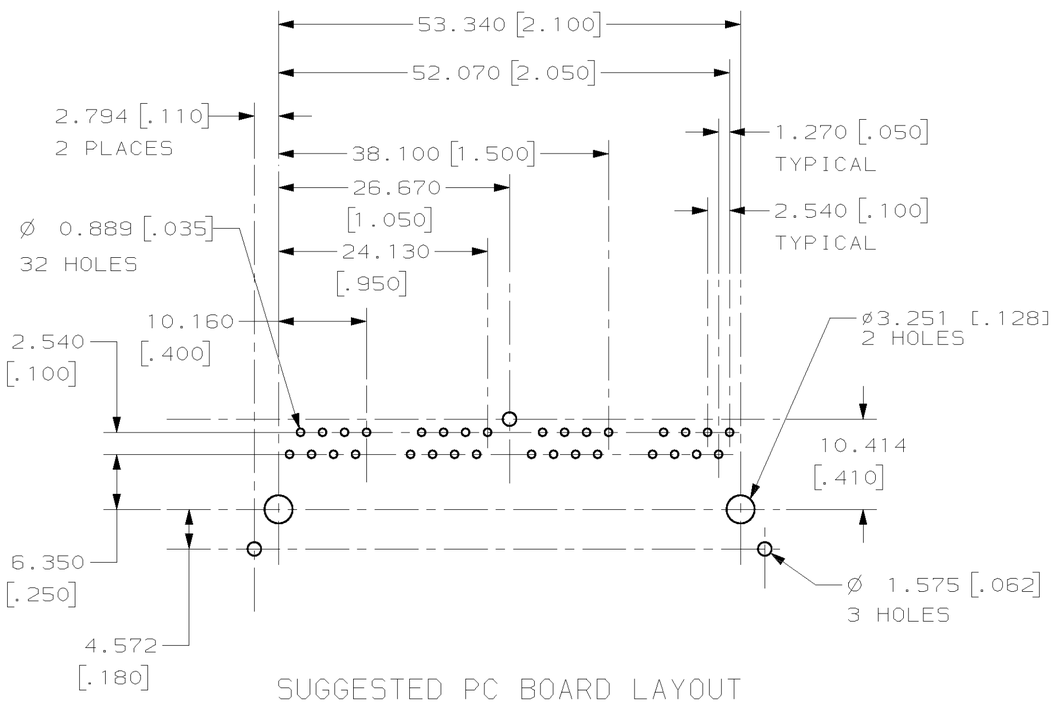

SUGGESTED PC BOARD LAYOUT
COMPONENT SIDE
SEE APPLICATION SPECIFICATION

558503

558503-1
PART NUMBER

THIS DRAWING IS A CONTROLLED DOCUMENT FOR AMP INCORPORATED. IT IS SUBJECT TO CHANGE AND THE CONTROLLING ENGINEERING ORGANIZATION SHOULD BE CONTACTED FOR THE LATEST REVISION.

DIMENSIONS: mm [INCHES]

TOLERANCES UNLESS OTHERWISE SPECIFIED:
0 PLC ±-
1 PLC ±-
2 PLC ±0.25 [.01]
3 PLC ±0.13 [.005]
4 PLC ±-
ANGLES ±-
FINISH 1

MATERIAL 1

DWN	W. LONG	3-8-94
CHK	B. FOX	3-16-94
APVD	G. REED	3-16-94
PRODUCT SPEC	108-1392	
APPLICATION SPEC	114-2048	
WEIGHT	–	

CUSTOMER DRAWING

AMP Incorporated
Harrisburg, PA 17105-3608

NAME
MODULAR JACK ASSEMBLY,
PORT, 8 POSITION, RIGHT ANGLE,
CATEGORY 5, PC BOARD GROUND SHIELD

SIZE	CAGE CODE	DRAWING NO
A2	00779	C-558503

SCALE	SHEET	OF	REV
2:1	1	1	C