CKT. SIZE	DIM. "A"	DIM. "B"	DIM. "C"	DIM. "D"	DIM. "E"	DIM. "F"	DIM. "G"	DIM. "H"
2	1.417 (36.00)	N/A N/A	.984 (25.00)	.984 (25.00)	.528 (13.40)	.398 (10.10)	.343 (8.70)	.213 (5.40)
4	1.583 (40.20)	.165 (4.20)	1.150 (29.20)	1.150 (29.20)	.693 (17.60)	.563 (14.30)	.508 (12.90)	.378 (9.60)
6	1.748 (44.40)	.331 (8.40)	1.315 (33.40)	1.315 (33.40)	.858 (21.80)	.728 (18.50)	.673 (17.10)	.543 (13.80)
8	1.913 (48.60)	.496 (12.60)	1.480 (37.60)	1.480 (37.60)	1.024 (26.00)	.894 (22.70)	.839 (21.30)	.709 (18.00)
10	2.078 (52.80)	.661 (16.80)	1.645 (41.80)	1.645 (41.80)	1.189 (30.20)	1.059 (26.90)	1.004 (25.50)	.874 (22.20)
12	2.244 (57.00)	.827 (21.00)	1.811 (46.00)	1.811 (46.00)	1.354 (34.40)	1.224 (31.10)	1.169 (29.70)	1.039 (26.40)
14	2.409 (61.20)	.992 (25.20)	1.976 (50.20)	1.976 (50.20)	1.520 (38.60)	1.390 (35.30)	1.335 (33.90)	1.205 (30.60)
16	2.575 (65.40)	1.157 (29.40)	2.142 (54.40)	2.142 (54.40)	1.685 (42.80)	1.555 (39.50)	1.500 (38.10)	1.370 (34.80)
18	2.740 (69.60)	1.323 (33.60)	2.307 (58.60)	2.307 (58.60)	1.850 (47.00)	1.720 (43.70)	1.665 (42.30)	1.535 (39.00)
20	2.906 (73.80)	1.488 (37.80)	2.472 (62.80)	2.472 (62.80)	2.016 (51.20)	1.886 (47.90)	1.831 (46.50)	1.701 (43.20)
22	3.071 (78.00)	1.653 (42.00)	2.638 (67.00)	2.638 (67.00)	2.181 (55.40)	2.051 (52.10)	1.996 (50.70)	1.866 (47.40)
24	3.236 (82.20)	1.819 (46.20)	2.803 (71.20)	2.803 (71.20)	2.346 (59.60)	2.217 (56.30)	2.161 (54.90)	2.031 (51.60)

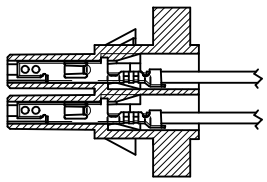

SECTION "A-A"

TERMINAL ORIENTATION

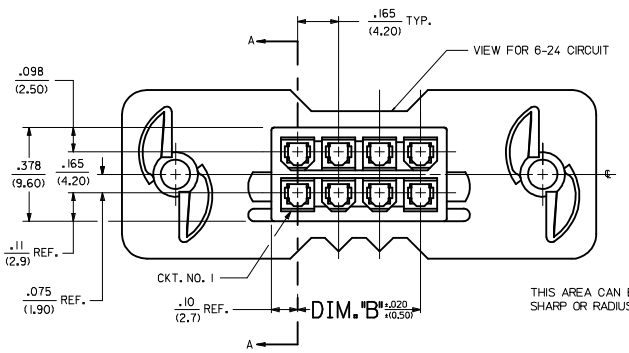

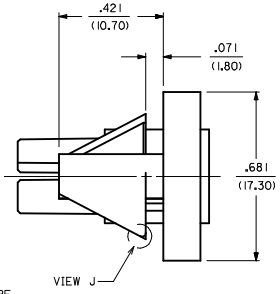

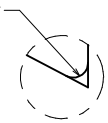

VIEW "J"

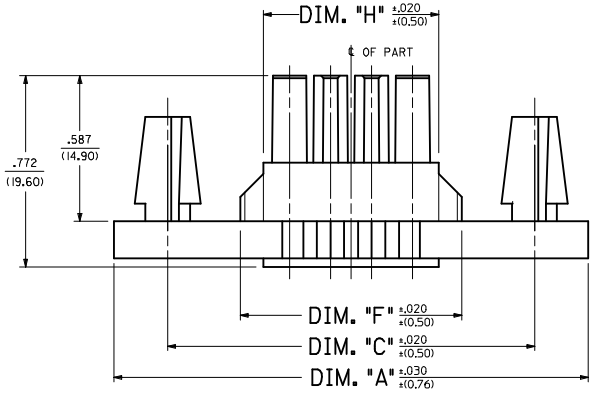

2-8 & 12-24 CIRCUIT HEADER

(SEE SHEET 2 FOR 10 CIRCUIT HEADER DESIGN)

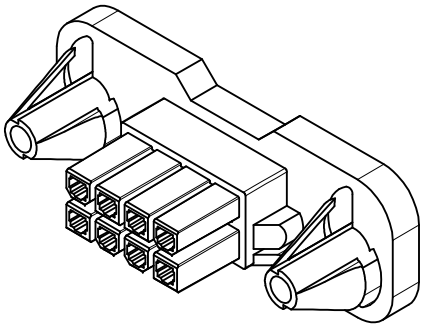

VIEW FOR 2 AND 4 CIRCUIT NOTCH REMOVED

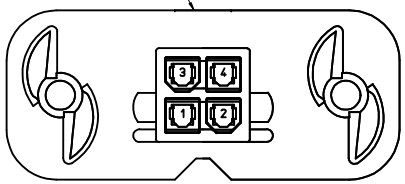

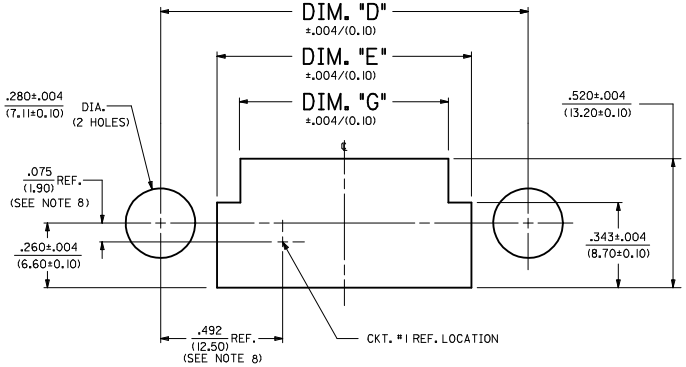

RECOMMENDED PANEL CUT-OUT FOR .050±.012/(1.27±0.30) THICK PANEL

(SEE NOTE 11)

NOTES:

1. MATERIAL:
   "1" = NYLON UNFILLED 94V-2, COLOR: NATURAL (WHITE)
   "2" = NYLON UNFILLED 94V-0, COLOR: NATURAL (WHITE)
   "3" = NYLON UNFILLED 94V-2, COLOR: BLACK.
   "4" = NYLON UNFILLED 94V-0, COLOR: BLACK.
2. FINISH: NOT APPLICABLE.
3. PRODUCT SPECIFICATION: PS-5556-002
4. PACKAGING: PK-42474-001.
5. PART MATES WITH MINI-FIT B.M.I. PLUG #42475, AND HEADERS 42404, 42440, 43810, 44068 & 43879.
6. PART TO BE USED WITH MOLEX FEMALE TERMINAL #5556, 44476, 45750, OR 46018.
7. THIS CONNECTOR ALLOWS FOR .050/(1.27) MAX. MISALIGNMENT IN ANY DIRECTION.
8. THIS DIMENSION TO BE USED FOR ALIGNMENT OF THE MATING CONNECTOR.
9. CONNECTOR ASSEMBLIES ARE NOT TO BE MATED OR UNMATED WHILE CIRCUITS ARE LIVE.
10. THIS PART IS INTENDED FOR ONE PANEL INSERTION ONLY. REMOVAL AND RE-INSERTION CAN DAMAGE THE MOUNTING SPIRALS.
11. PANEL SHOULD BE PUNCHED IN THE DIRECTION OF CONNECTOR INSERTION.
12. BOTH SPIRALS SHOULD BE INSERTED INTO THE PANEL AT THE SAME TIME. ROCKING THE PART INTO PLACE MAY CAUSE SPIRAL DAMAGE.
13. THIS PART IS NOT INTENDED TO PROVIDE ANY ALIGNMENT OF CUSTOMER COMPONENTS OR MODULES, SUCH AS POWER SUPPLIES AND CHASSIS.
14. IF THIS PRODUCT IS STORED IN AN ENVIRONMENT WITH A RELATIVE HUMIDITY OF LESS THAN 50%, MOISTURE MUST BE ADDED.
    REFER TO TECHNICAL ADVISORY AS-45499-001 FOR INSTRUCTIONS.
15. USING 5556 OR 44476 TERMINALS:
    A MAXIMUM TOLERANCE OF .050/(1.27) ALLOWS FOR 2 POINTS OF ELECTRICAL CONTACT.
    A MAXIMUM TOLERANCE OF .020/(0.51) ALLOWS FOR 4 POINTS OF CONTACT.
    USING 45750 OR 46018 TERMINALS:
    A MAXIMUM TOLERANCE OF .020/(0.51) ALLOWS FOR FULL CONTACT ENGAGEMENT.
16. WIRES ARE TO BE DRESSED IN SUCH A MANNER TO ALLOW THE TERMINALS TO FLOAT FREELY IN THE POCKET.
17. PART CONFORMS TO CLASS "B" REQUIREMENTS OF COSMETIC SPECIFICATION PS-45499-002.

LEGEND:

42474 - ** * 1

BASE NUMBER

CIRCUIT SIZE (02-24)

MATERIAL (SEE NOTE 1.)

ADD 8CKT P/N	2017/04/28
EC NO: UCP2017-2380	2017/04/28
DRWN:BAPPELDORN	2017/05/05
CHKD:JBELL	
APPR:FSMITH	
DESCRIPTION	
REV	
P12	

QUALITY SYMBOLS: ▽=0, ▽=0, ▽=0

GENERAL TOLERANCES (UNLESS SPECIFIED)

	mm	INCH
4 PLACES	± ---	± ---
3 PLACES	± ---	± .015
2 PLACES	± 0.38	± ---
1 PLACE	± ---	± ---
ANGULAR ±1/2°		

DRAFT WHERE APPLICABLE MUST REMAIN WITHIN DIMENSIONS

DIMENSION STYLE: IN/MM

SCALE: 1:1

DESIGN UNITS: METRIC

THIRD ANGLE PROJECTION

DRAWN BY	GEP	DATE 1989/08/24
CHECKED BY	RJF	DATE 1989/08/24
APPROVED BY	RAS	DATE 1989/08/24

TITLE: PANEL-MOUNT RECEPTACLE BLIND MATE MINI-FIT JR. SERIES

MOLEX INCORPORATED

MATERIAL NO.: SEE SHEET 2

DOCUMENT NO.: SD-42474-****

SHEET NO.: 1 OF 2

SIZE: D

THIS DRAWING CONTAINS INFORMATION THAT IS PROPRIETARY TO MOLEX INCORPORATED AND SHOULD NOT BE USED WITHOUT WRITTEN PERMISSION

PART NUMBER	ENG. NUMBER	CKT. SIZE	MATERIAL (SEE NOTE 1.)
NOT TOOLED	42474-0211	2	94V-2
15-06-0040	42474-0411	4	94V-2
15-06-0060	42474-0611	6	94V-2
15-06-0080	42474-0811	8	94V-2
15-06-0100	42474-1011	10	94V-2
NOT TOOLED	42474-1211	12	94V-2
15-06-0140	42474-1411	14	94V-2
NOT TOOLED	42474-1611	16	94V-2
15-06-0180	42474-1811	18	94V-2
NOT TOOLED	42474-2011	20	94V-2
NOT TOOLED	42474-2211	22	94V-2
15-06-0240	42474-2411	24	94V-2

PART NUMBER	ENG. NUMBER	CKT. SIZE	MATERIAL (SEE NOTE 1.)
NOT TOOLED	42474-0221	2	94V-0
15-06-0041	42474-0421	4	94V-0
15-06-0061	42474-0621	6	94V-0
15-06-0081	42474-0821	8	94V-0
15-06-0101	42474-1021	10	94V-0
NOT TOOLED	42474-1221	12	94V-0
15-06-0141	42474-1421	14	94V-0
NOT TOOLED	42474-1621	16	94V-0
15-06-0181	42474-1821	18	94V-0
NOT TOOLED	42474-2021	20	94V-0
NOT TOOLED	42474-2221	22	94V-0
15-06-0241	42474-2421	24	94V-0

ITEM NUMBER	CKT. SIZE	MATERIAL (SEE NOTE 1.)
NOT TOOLED	2	94V-2
42474-0431	4	94V-2
42474-0631	6	94V-2
42474-0831	8	94V-2
42474-1031	10	94V-2
NOT TOOLED	12	94V-2
42474-1431	14	94V-2
NOT TOOLED	16	94V-2
42474-1831	18	94V-2
NOT TOOLED	20	94V-2
NOT TOOLED	22	94V-2
42474-2431	24	94V-2

ITEM NUMBER	CKT. SIZE	MATERIAL (SEE NOTE 1.)
NOT TOOLED	2	94V-0
42474-0441	4	94V-0
42474-0641	6	94V-0
42474-0841	8	94V-0
42474-1041	10	94V-0
NOT TOOLED	12	94V-0
42474-1441	14	94V-0
NOT TOOLED	16	94V-0
42474-1841	18	94V-0
NOT TOOLED	20	94V-0
NOT TOOLED	22	94V-0
42474-2441	24	94V-0

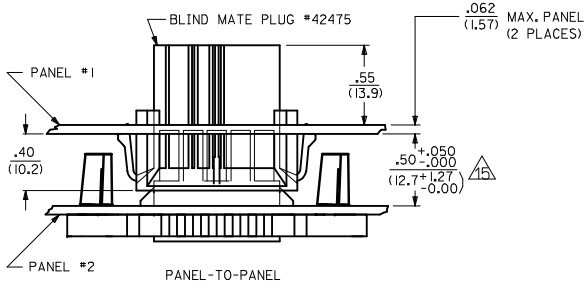

PANEL-TO-PANEL APPLICATION #1

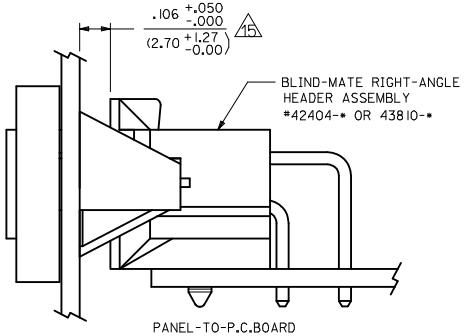

PANEL-TO-P.C.BOARD APPLICATION #3

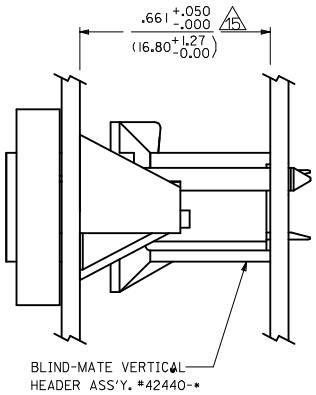

PANEL-TO-P.C.BOARD APPLICATION #2

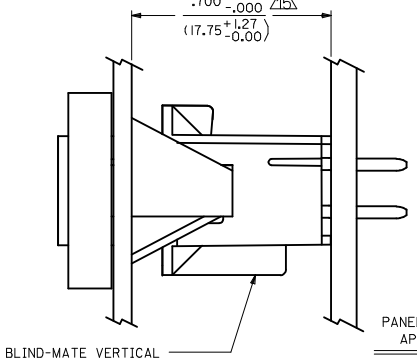

PANEL-TO-P.C.BOARD APPLICATION #4

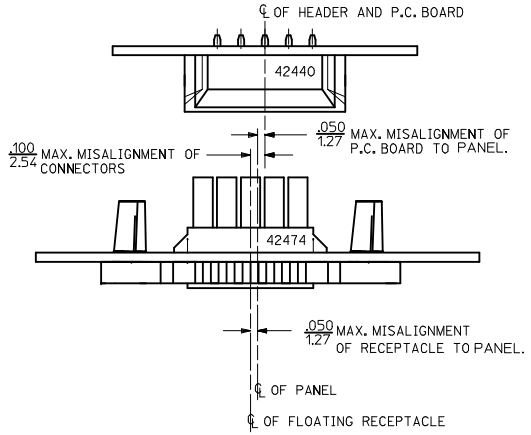

ALIGNMENT TOLERANCES FOR .050/1.27 MAX. BOARD-TO-PANEL MISALIGNMENT (±.050/1.27 RECEPTACLE FLOAT)

SEE SHEET 1
EC NO: UCP2017-2380
DRWN:BAPPELDORN 2017/04/28
CHKD:JBELL 2017/04/28
APPR:FSMITH 2017/05/05
DESCRIPTION
P12
REV

QUALITY SYMBOLS
F =0
E =0
D =0

GENERAL TOLERANCES (UNLESS SPECIFIED)

	mm	INCH
4 PLACES	± ---	± ---
3 PLACES	± ---	± .015
2 PLACES	± 0.38	± ---
1 PLACE	± ---	± ---
ANGULAR ±1/2°		

DRAFT WHERE APPLICABLE MUST REMAIN WITHIN DIMENSIONS

DIMENSION STYLE: IN/MM
SCALE: 1:1
DESIGN UNITS: METRIC
THIRD ANGLE PROJECTION

		DATE
DRAWN BY	GEP	1989/08/24
CHECKED BY	RJF	1989/08/24
APPROVED BY	RAS	1989/08/24

TITLE: PANEL-MOUNT RECEPTACLE BLIND MATE MINI-FIT JR. SERIES

molex MOLEX INCORPORATED

MATERIAL NO.: SEE CHART
DOCUMENT NO.: SD-42474-****
SHEET NO.: 2 OF 2
SIZE: C

THIS DRAWING CONTAINS INFORMATION THAT IS PROPRIETARY TO MOLEX INCORPORATED AND SHOULD NOT BE USED WITHOUT WRITTEN PERMISSION