QSFP CABLE ASSEMBLY PART NUMBER			OVERALL LENGTH L (m)	CABLE DIA. (mm)	CABLE TYPE
STANDARD BANDWIDTH (OM2)* (ORANGE CABLE)	HIGH BANDWIDTH (OM3)* (AQUA CABLE)	HIGH BANDWIDTH (OM4)* (AQUA CABLE)			
106283-5001	106283-5101	106283-5401	1.0 +0.2/-0	3.0	BARE FIBER INTERCONNECT, SINGLE JACKET
106283-5009	106283-5109	106283-5402	2.0 +0.2/-0		
TBD	TBD	106283-5415	2.4 +0.2/-0		
106283-5002	106283-5102	106283-5403	3.0 +0.2/-0		
TBD	TBD	106283-5416	3.8 +0.2/-0		
TBD	106283-5119	TBD	4.0 +0.2/-0		
TBD	TBD	106283-5417	4.6 +0.2/-0		
106283-5003	106283-5103	106283-5404	5.0 +0.20/-0		
TBD	TBD	106283-5411	6.0 +0.20/-0		
TBD	TBD	106283-5418	6.1 +0.20/-0		
106283-5014	106283-5114	106283-5414	7.0 +0.20/-0		
TBD	TBD	106283-5419	7.6 +0.20/-0		
106283-5004	106283-5104	106283-5405	10.0 +0.3/-0		
TBD	106283-5117	TBD	12.0 +0.3/-0		
106283-5005	106283-5105	106283-5406	15.0 +0.3/-0		
106283-5007	106283-5107	106283-5407	20.0 +0.4/-0		
106283-5017	106283-5108	106283-5408	30.0 +0.6/-0		
106283-5015	106283-5115	TBD	50.0 +1.0/-0	4.5	BARE FIBER INTERCONNECT, DUAL JACKET
TBD	106283-5126	106283-5409	75.0 +1.5/-0		
TBD	106283-5127	106283-5410	80.0 +1.6/-0		
106283-5016	106283-5116	TBD	100.0 +2.0/-0		

FROM P0	TO CONNECTOR	TO FIBER ID
Rx-1	P1-B	Tx-1
Rx-2	P2-B	Tx-2
Rx-3	P3-B	Tx-3
Rx-4	P4-B	Tx-4
UNUSED	UNUSED	UNUSED
UNUSED	UNUSED	UNUSED
UNUSED	UNUSED	UNUSED
UNUSED	UNUSED	UNUSED
Tx-4	P4-A	Rx-4
Tx-3	P3-A	Rx-3
Tx-2	P2-A	Rx-2
Tx-1	P1-A	Rx-1

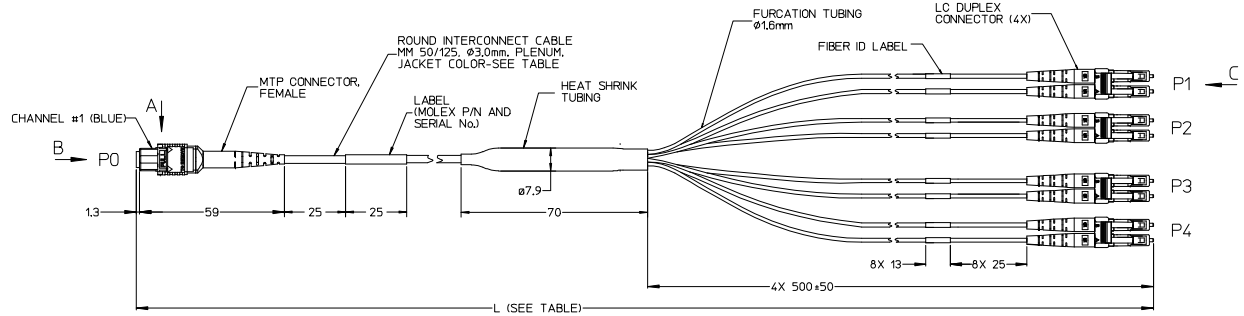

SINGLE JACKET ASSEMBLY

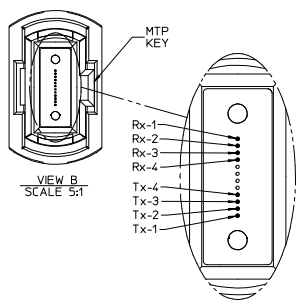

VIEW B
SCALE 5:1

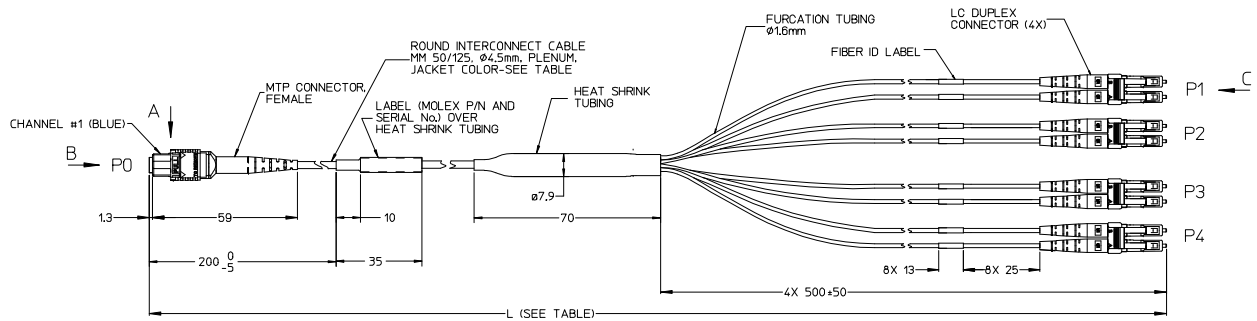

DUAL JACKET ASSEMBLY

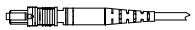

VIEW A

VIEW C

NOTES:

1. CABLE ASSEMBLY SPECIFICATIONS:

OPTICAL PROPERTIES	
FIBER TYPE	MULTIMODE 50/125 µm BEND-INSENSITIVE
CONNECTOR INSERTION LOSS MTP/LC (MAX.)	0.5/0.35 dB
CABLE ATTENUATION (MAX.)	3.5/1.2 dB/km AT 850/1300 nm
*BANDWIDTH	SEE TABLE 1
ENVIRONMENTAL PROPERTIES	
CONNECTOR MATERIALS	UL94 V-0
CABLE FLAMMABILITY RATING	PLENUM OFNP (NFPA 262/UL 910)
OPERATING TEMPERATURE RANGE	-0°C TO +70°C
MECHANICAL PROPERTIES	
FIBER COUNT	4 Tx X 4 Rx
CABLE MIN. BEND RADIUS	
SHORT TERM	50 mm - SINGLE JACKET
	89 mm - DUAL JACKET
LONG TERM	20 mm - SINGLE JACKET
	2 57 mm - DUAL JACKET
NO LOAD	12.5 mm - SINGLE JACKET
	OR SUBUNIT JACKET OF DUAL JACKET
COMPRESSIVE FORCE	
SINGLE JACKET OR SUBUNIT JACKET OF DUAL JAKET	>3.5 N/mm

2 IN CONTROLLED 90° AND 180° BENDS, CABLE MINIMUM BEND RADIUS CAN BE REDUCED TO 1.5 in (38 mm).

TABLE 1

FIBER TYPE	OVERFILLED LAUNCH BANDWIDTH, MIN. (MHz-km)		1 GIGABIT ETHERNET LINK DISTANCE, MIN. (m)		10 GIGABIT ETHERNET LINK DISTANCE, MIN. (m)		EFFECTIVE MODAL BANDWIDTH (MHz-km)
	850 nm	1300 nm	850 nm	1300 nm	850 nm	1300 nm	850 nm
STANDARD BANDWIDTH (OM2)	500	500	600	---	86	---	---
HIGH BANDWIDTH (OM3)	1500	500	1000	---	300	---	2000
HIGH BANDWIDTH (OM4)	3500	550	1040	---	550	---	4700

ENTER DESCRIPTION
EC NO: MF2015-0480 2015/02/10
DRWN:YBEDNYAK 2015/02/17
CHKD:
APPR: IGUMIN
DESCRIPTION
REV E10

QUALITY SYMBOLS: ▼=0 ⚠=0

GENERAL TOLERANCES (UNLESS SPECIFIED)

	mm	INCH
4 PLACES	± ---	± ---
3 PLACES	± ---	± ---
2 PLACES	± ---	± ---
1 PLACE	± ---	± ---
0 PLACE	±	±
ANGULAR ±1/2°		

DRAFT WHERE APPLICABLE MUST REMAIN WITHIN DIMENSIONS

DIMENSION STYLE: MM ONLY
SCALE: 1:1
DESIGN UNITS: INCH
THIRD ANGLE PROJECTION

DRAWN BY: IGUMIN DATE: 2006/01/31
CHECKED BY: DATE:
APPROVED BY: IGUMIN DATE: 2010/04/06
MATERIAL NO.: SEE TABLE
SIZE: D

TITLE: MOLEX QSFP OPTICAL BREAK-OUT CABLE ASSEMBLY

molex

DOCUMENT NO.: SD-106283-5XXX
SHEET NO.: 1 OF 1

THIS DRAWING CONTAINS INFORMATION THAT IS PROPRIETARY TO MOLEX INCORPORATED AND SHOULD NOT BE USED WITHOUT WRITTEN PERMISSION