THIS DRAWING IS UNPUBLISHED. RELEASED FOR PUBLICATION –,– .
© COPYRIGHT – By – ALL RIGHTS RESERVED.

REVISIONS

P	LTR	DESCRIPTION	DATE	DWN	APVD
	E2	REVISED PER ECO–12–004648	08MAR12	KH	DR
	E3	REVISED PER ECO–16–017419	14MAR2017	RS	DR

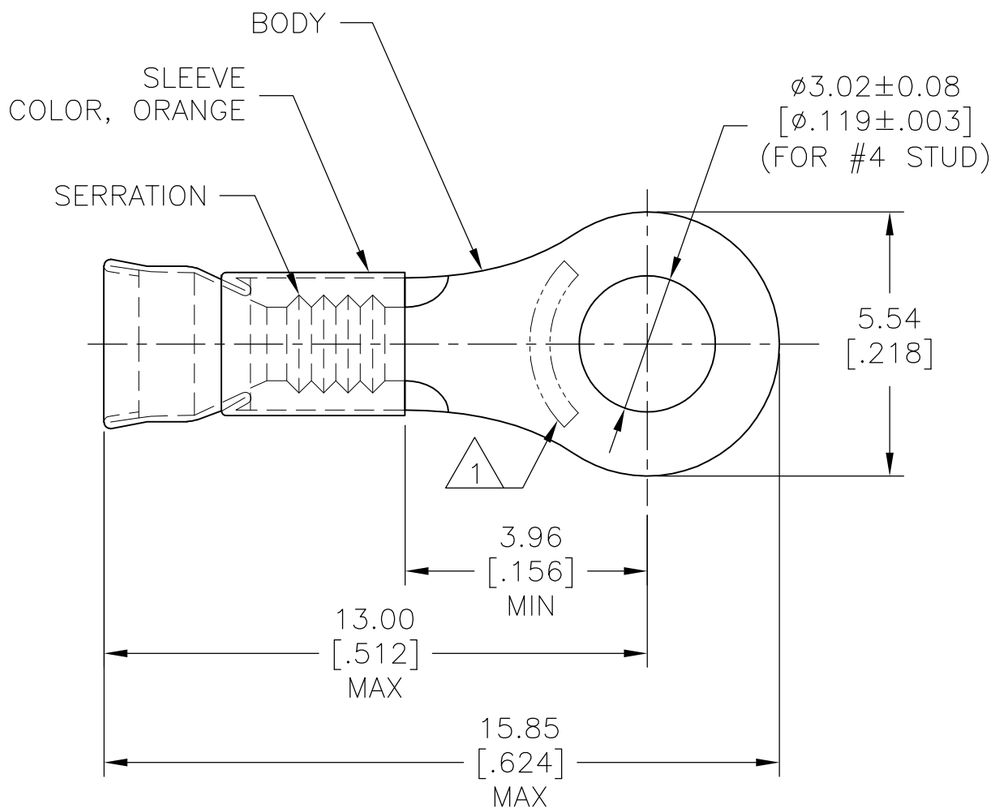

1. STAMP AMP 22–18 APPROX AS SHOWN 22–16 TERMINALS ARE STAMPED 22–18 IN ACCORDANCE WITH MILITARY SPEC SAE AS7928 COMMERCIAL WIRE RANGE IS 22–16.
2. WIRE INSUL DIA,2.67–3.56 [.105–.140].
3. TONGUE MATL THK, 0.79±0.05 [.031±.002].
4. NOTE DELETED.
5. NOTE DELETED.

FINISH	MAX OPERATING TEMPARATURE	QTY	PACKAGE TYPE	PART NO
— —	649°C [1200°F]	1000	LOOSE PIECE	321887

AMP INCORPORATED
CUSTOMER SERVICE SYSTEM

FOR ADDITIONAL PRODUCT INFORMATION OR COPIES OF DRAWINGS AND TECHNICAL DOCUMENTS	PRODUCT INFORMATION CENTER 1–800–522–6752
FOR APPLICATION TOOLING INFORMATION	TOOLING ASSISTANCE CENTER 1–800–722–1111
FOR ORDER ENTRY	1–800–526–5142

MAX RECOMMENDED OPERATING TEMPERATURE: SEE TABLE

VOLTAGE RATING: – –

CIRCULAR MIL AREA: 0.26mm² –1.65mm² [509–3260] STRANDED WIRE

THIS DRAWING IS A CONTROLLED DOCUMENT.

DIMENSIONS: mm [INCHES]

TOLERANCES UNLESS OTHERWISE SPECIFIED:

0 PLC	± –
1 PLC	± –
2 PLC	± 0.20 [.008]
3 PLC	± –
4 PLC	± –
ANGLES	± –

MATERIAL: BODY, NI PER ASTM B162 SLEEVE, NI SIL PER ASTM B122

FINISH: SEE TABLE

DWN L OLMEDA 10OCT94
CHK M ELLIS 10OCT94
APVD S BORTNER 10OCT94
PRODUCT SPEC —
APPLICATION SPEC —
WEIGHT —

TE Connectivity

NAME: TERMINAL, RING TONGUE, STRATOTHERM, DIAMOND GRIP, WIRE SIZE, 22–16 AWG

SIZE	CAGE CODE	DRAWING NO	RESTRICTED TO
A3	00779	C–321887	—

CUSTOMER DRAWING | SCALE 6:1 | SHEET 1 OF 1 | REV E3

1470–19 (1/15)