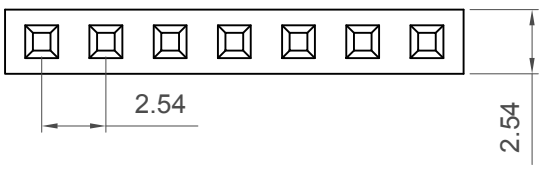

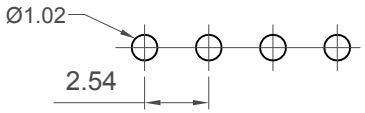

Recommended PCB Layout

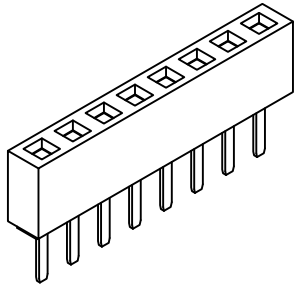

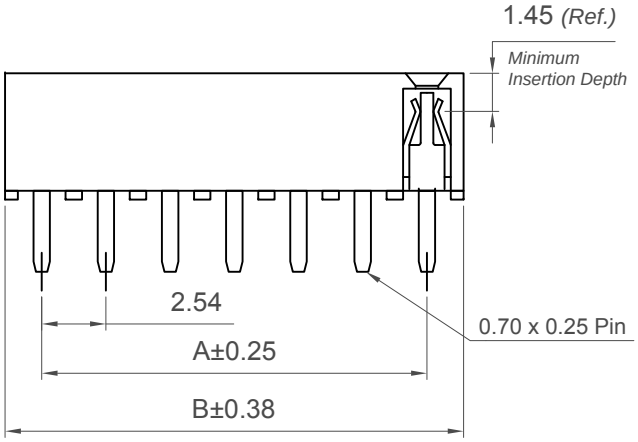

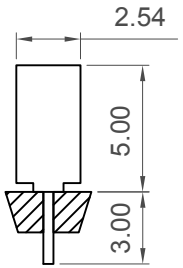

Number of Contacts	Dimensions	
	A	B
2	2.54	5.58
3	5.08	8.12
4	7.62	10.66
5	10.16	13.20
6	12.70	15.74
7	15.24	18.28
8	17.78	20.82
9	20.32	23.36
10	22.86	25.90
11	25.40	28.44
12	27.94	30.98
13	30.48	33.52
14	33.02	36.06
15	35.56	38.60
16	38.10	41.14
17	40.64	43.68
18	43.18	46.22
19	45.72	48.76
20	48.26	51.30
21	50.80	53.84
22	53.34	56.38
23	55.88	58.92
24	58.42	61.46
25	60.96	64.00
26	63.50	66.54
27	66.04	69.08
28	68.58	71.62
29	71.12	74.16
30	73.66	76.70
31	76.20	79.24
32	78.74	81.78
33	81.28	84.32
34	83.82	86.86
35	86.36	89.40
36	88.90	91.94
37	91.44	94.48
38	93.98	97.02
39	96.52	99.56
40	99.06	102.10

Specifications 规格

Material 物料
Insulator 绝缘体:
Standard 标准: Polyamide, Nylon 6T, UL94V-0
Options 可选: Polyester, LCP, UL94V-0
Polyester, PBT, UL94V-0

Contact 接触: Phosphor Bronze

Plating 电镀
Contact 接触: See Ordering Grid

Electrical 电气
Current Rating 电流额定值: 3 Amp
Contact Resistance 接触电阻值: 20 mΩ max.
Insulation Resistance 绝缘电阻值: 1000 MΩ min.
Dielectric Withstand Voltage 寒耐电压: 600 V AC

Mechanical & Environmental 机械 & 环境
Operating Temperature 工作温度: -40°C to +105°C
Soldering Process 可焊性
Nylon 6T (Standard标准物料)
IR Reflow 回流焊: 260°C for 10 sec.
Wave 波峰焊: 230°C for 5-10 sec.
Manual Solder 人工焊接: 350°C for 3-5sec
LCP (Option 可选物料)
IR Reflow 回流焊: 260°C for 10 sec.
Wave 波峰焊: 250°C for 5-10 sec
Manual Solder 人工焊接: 350°C for 3-5 sec
PBT (Option 可选物料)
Manual Solder 人工焊接: 330°C for 3-5 sec.
(Not suitable for hi-temp process 不适合高温处理)

Mates with 配套之母座
(Subject to Pin Length 在端子长度适合的条件下)
BG020 BG030 BG035 BG055
BG060 BG075 BG080

Ordering Grid

BG095 — XX — X — X — X

Request Samples and Quotation

No. of Contacts
02 to 40

Contact Plating
A = Gold Flash All Over *(Standard)*
B = Selective Gold Flash Contact Area/Tin On Tail
C = Tin All Over
G = 10μ" Gold Contact Area/Tin On Tail
I = 30μ" Gold Contact Area/Tin On Tail

Packing Options
D = Tube *(Standard)*
E = Tube with Cap
F = Tube with Film
G = Plastic Box

Insulator Material
N = Nylon 6T *(Standard)*
P = PBT
L = LCP

Part Number	Product Description
BG095	2.54mm Pitch Socket, Single Row, Through-Hole, Vertical, Dual Beam Folded Contact
Drawing Date: 28th December 2007	

By	AJO	Tolerances (Except as Noted) Length	Angle	Units: Metric (mm)
Detail	Change To Dimension	X. ± 0.30 X.X ± 0.20 X.XX ± 0.15 X.XXX ± 0.10	X.° ± 5° X.X° ± 2° X.XX° ± 1° X.XXX° ± 0.5°	3rd Angle Projection
Revision	E1			
Date	29/05/15			

RoHS COMPLIANT 2011/65/EU Decs-BDE

This drawing is confidential and copyright of Global Connector Technology, Ltd (GCT). This drawing must not be copied or disclosed without written consent. E & OE

GCT
Global Connector Technology
www.gct.co

Not to Scale	Drawn By ASS	Sheet No. 1/1