MICRO SWITCH
a Honeywell Division
FED. MFG. CODE 91929

CONNECTOR – BLOCK

CATALOG LISTING
1XL2

THIS DRAWING COVERS A PROPRIETARY ITEM AND IS THE PROPERTY OF MICRO SWITCH. A DIVISION OF HONEYWELL. THIS DRAWING IS NOT TO BE COPIED OR USED WITHOUT THE APPROVAL OF MICRO SWITCH

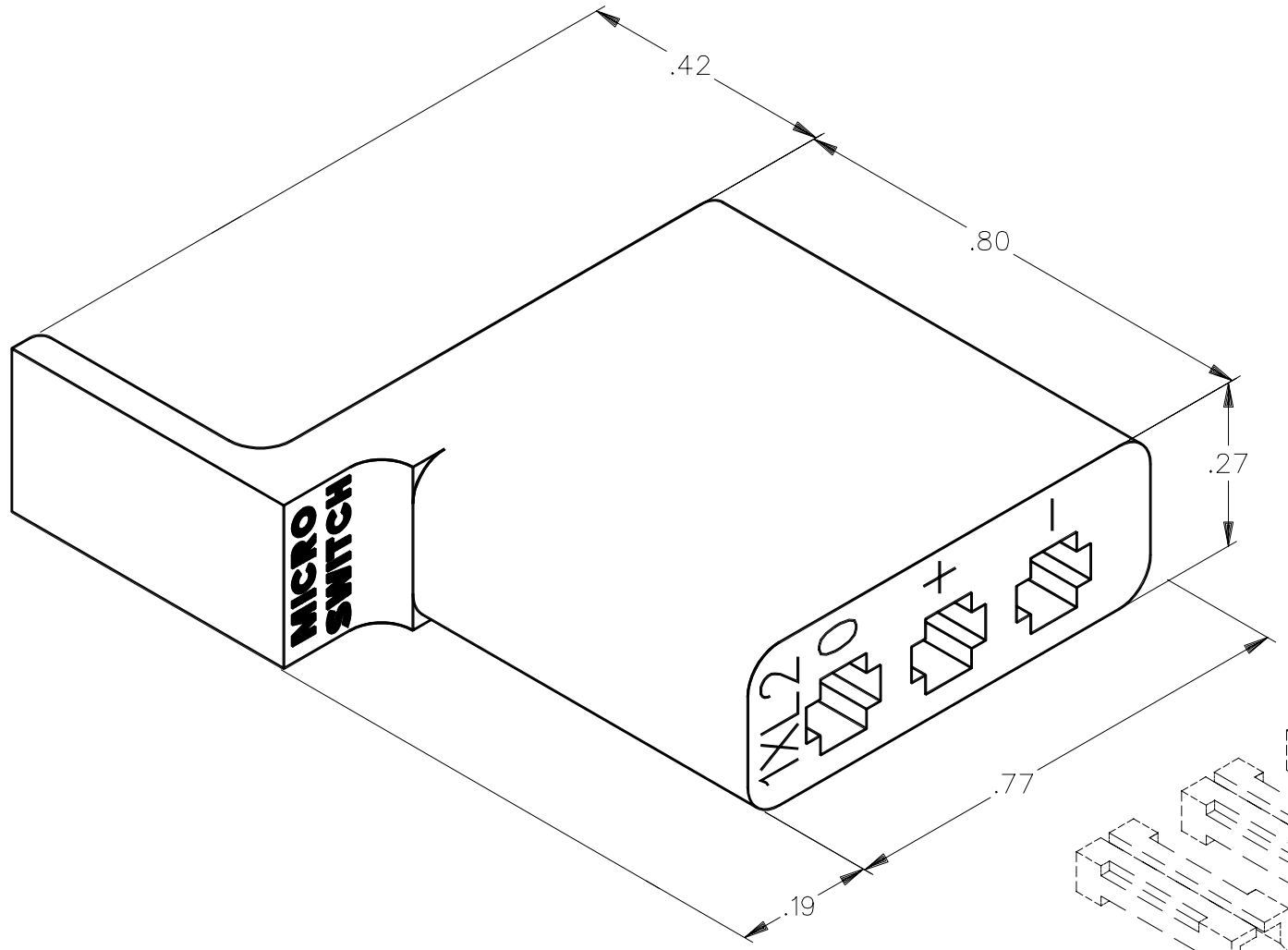

RECEPTACLES ARE NOT INCLUDED WITH THIS LISTING

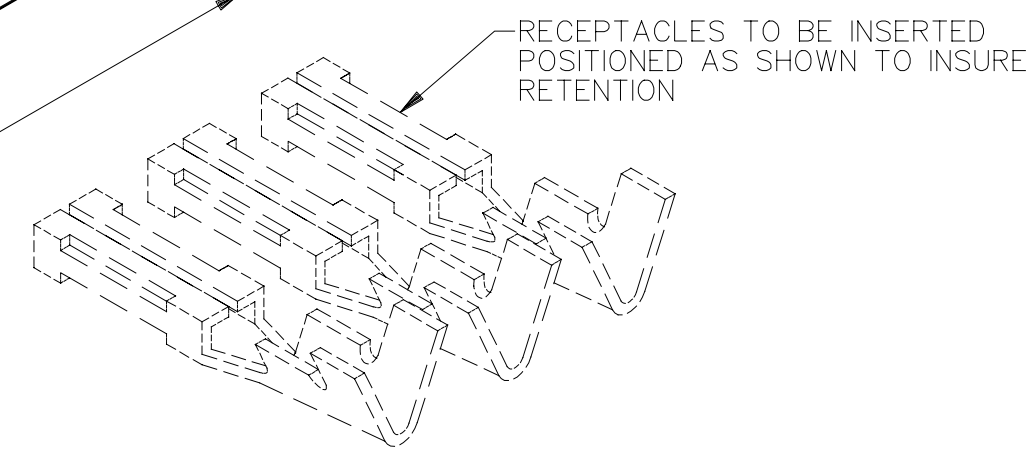

NOTES
1 TO BE USED WITH MOLEX 1943 TERMINAL PART NO.
LOOSE PIECE 05-06-0201
CHAIN FORM 05-06-0200
FOR .100 WIDE X .020 THICK TAB AND WIRE SIZE
OF 18-24 AWG WITH .060-.105 INSULATION
2 MOLEX HAND ASSEMBLY TOOL ORDER NO. 11-01-0008 FOR
CRIMPING WIRES TO TERMINALS (ORDER FROM MOLEX INCORPORATED)

THIRD ANGLE PROJECTION
SCALE 4:1
DO NOT SCALE PRINT

UNLESS OTHERWISE SPECIFIED TOLERANCES ARE		
ONE PLACE	(.0)	±.030
TWO PLACE	(.00)	±.015
THREE PLACE	(.000)	±.005
ANGLES		±

WEIGHT

DRAWING NUMBER	M	1XL2
ISSUE	2	
REPLACES		
RELEASE NO.	PR-16715	
CHECK		
CHECK		
CHECK	24OCT88	T M M
CHECK	24OCT88	K A G
DRAWN	DDM/CAD	

REVISIONS
A CO-65875 T M M 19 MAY 89